REGULATED DC POWER SUPPLY
MODELS 6256B, 6263B, 6264B, 6265B, 6266B, 6267B, 6271B, AND 6274B

* OPERATING AND SERVICE MANUAL FOR
MODEL 6256B, SERIALS 1542A–01167 AND ABOVE
MODEL 6263B, SERIALS 1542A–01227 AND ABOVE
MODEL 6264B, SERIALS 1539A–01656 AND ABOVE
MODEL 6265B, SERIALS 1529A–01231 AND ABOVE
MODEL 6266B, SERIALS 1539A–01671 AND ABOVE
MODEL 6267B, SERIALS 1539A–02341 AND ABOVE
MODEL 6271B, SERIALS 1543A–00746 AND ABOVE
MODEL 6274B, SERIALS 1539A–01811 AND ABOVE

* For instruments with serial numbers above those listed, a change page may be included.

HP Part No. 5950-1765
Microfiche Part No. 5950-1766

Printed: January, 1976

SAFETY SUMMARY

The following general safety precautions must be observed during all phases of operation, service, and repair of this instrument. Failure to comply with these precautions or with specific warnings elsewhere in this manual violates safety standards of design, manufacture, and intended use of the instrument. Hewlett-Packard Company assumes no liability for the customer's failure to comply with these requirements.

BEFORE APPLYING POWER.

Verify that the product is set to match the available line voltage and the correct fuse is installed.

GROUND THE INSTRUMENT.

This product is a Safety Class 1 instrument (provided with a protective earth terminal). To minimize shock hazard, the instrument chassis and cabinet must be connected to an electrical ground. The instrument must be connected to the ac power supply mains through a three-conductor power cable, with the third wire firmly connected to an electrical ground (safety ground) at the power outlet. For instruments designed to be hard-wired to the ac power lines (supply mains), connect the protective earth terminal to a protective conductor before any other connection is made. Any interruption of the protective (grounding) conductor or disconnection of the protective earth terminal will cause a potential shock hazard that could result in personal injury. If the instrument is to be energized via an external autotransformer for voltage reduction, be certain that the autotransformer common terminal is connected to the neutral (earthed pole) of the ac power lines (supply mains).

INPUT POWER MUST BE SWITCH CONNECTED.

For instruments without a built-in line switch, the input power lines must contain a switch or another adequate means for disconnecting the instrument from the ac power lines (supply mains).

DO NOT OPERATE IN AN EXPLOSIVE ATMOSPHERE.

Do not operate the instrument in the presence of flammable gases or fumes.

KEEP AWAY FROM LIVE CIRCUITS.

Operating personnel must not remove instrument covers. Component replacement and internal adjustments must be made by qualified service personnel. Do not replace components with power cable connected. Under certain conditions, dangerous voltages may exist even with the power cable removed. To avoid injuries, always disconnect power, discharge circuits and remove external voltage sources before touching components.

DO NOT SERVICE OR ADJUST ALONE.

Do not attempt internal service or adjustment unless another person, capable of rendering first aid and resuscitation, is present.

DO NOT EXCEED INPUT RATINGS.

This instrument may be equipped with a line filter to reduce electromagnetic interference and must be connected to a properly grounded receptacle to minimize electric shock hazard. Operation at line voltages or frequencies in excess of those stated on the data plate may cause leakage currents in excess of 5.0 mA peak.

SAFETY SYMBOLS.

⚠ Instruction manual symbol: the product will be marked with this symbol when it is necessary for the user to refer to the instruction manual (refer to Table of Contents).

⚡ Indicates hazardous voltages.

⏚ or ⊥ Indicate earth (ground) terminal.

WARNING — The WARNING sign denotes a hazard. It calls attention to a procedure, practice, or the like, which, if not correctly performed or adhered to, could result in personal injury. Do not proceed beyond a WARNING sign until the indicated conditions are fully understood and met.

CAUTION — The CAUTION sign denotes a hazard. It calls attention to an operating procedure, or the like, which, if not correctly performed or adhered to, could result in damage to or destruction of part or all of the product. Do not proceed beyond a CAUTION sign until the indicated conditions are fully understood and met.

DO NOT SUBSTITUTE PARTS OR MODIFY INSTRUMENT.

Because of the danger of introducing additional hazards, do not install substitute parts or perform any unauthorized modification to the instrument. Return the instrument to a Hewlett-Packard Sales and Service Office for service and repair to ensure that safety features are maintained.

Instruments which appear damaged or defective should be made inoperative and secured against unintended operation until they can be repaired by qualified service personnel.

MANUAL CHANGES
DC Power Supplies
Models 6256B, 6263B, 6264B, 6265B, 6266B, 6267B, 6271B, 6274B,
Manual HP P/N 5950-1765

Make all corrections in the manual according to errata below, then check the following table for your power supply serial number and enter any listed changes(s) in the manual.

MODEL	SERIAL Prefix	SERIAL Number	MAKE CHANGES
ALL			ERRATA
6256B	1643A	01342-01366	1
	1649A	01367-up	1,2,3
ALL			ERRATA
6263B	1643A	01512-02021	2
	1826A	02022-03111	2,4
	2030A	03112-04001	2,4,6
	2252A	04002-04141	2,4,6,12
	2333A	04142-04341	2,4,6, 12,15
	2417A	04342-04621	2,4,6,12, 15,16,19*
	2546A	04622-04641	2,4,6,12, 15,16,19
	2550A	04642-up	2,4,6,12, 15,16,19 20*
ALL			ERRATA
6264B	1643A	01921-01950	1
	1645A	01951-02010	1,2
	1715A	02011-03360	1,2,3
	2032	03361-04380	1-3,6,9*
	2215A	04381-04655	1-3,6,9
	2240A	04656-04730	1-3,6,9 10
	2248A	04731-04955	1-3,6, 9,10,11
	2323A	04956-05155	1-3,6, 9-11,14
	2334A	05156-07230	1-3,6, 9-11,14, 15
	2536A	07231-up	1-3,6, 9-11,14, 15,18

MODEL	SERIAL PREFIX	SERIAL NUMBER	MAKE CHANGES
ALL			ERRATA
6265B	1645A	01306-01550	2
	1831A	01551-02000	2,4
	2034A	02001-02170	2,4,6
	2345A	02171-02227	2,4,6, 12,15,16
	2440A	02228-up	2,4,6,12, 15,16,17*
ALL			ERRATA
6266B	1701A	02016-02465	2
	1828A	02466-02685	2,4
	1913A	02686-03125	2,4,5
	2033A	03126-04165	2,4,5,6
	2251A	04165-04435	2,4,5, 6,12
	2335A	04436-04675	2,4-6, 12,15
	2335A	04676-04705	2,4-6 12,15,16
	2419A	04706-05365	2,4-6,12, 15,16,19*
	2549A	05366-up	2,4-6,12, 15,16,19

MODEL	SERIAL Prefix	SERIAL Number	MAKE CHANGES
ALL			ERRATA
6267B	1643A	02961-03000	1
	1644A	03001-03180	1,2
	1710A	03181-05875	1,2,3
	2033A	05876-07115	1,2,3,6
	2206A	07116-07765	1-3,6,8
	2240A	07766-07865	1-3,6,8 10
	2245A	07866-08215	1-3,6, 8-11
	2322A	08216-08415	1-3,6,8 10,11,14
	2333A	08416-09591	1-3,6,8 10,11,14 15
	2537A	09592-up	1-3,6,8, 10,11,14, 15,16,18
ALL			ERRATA
6271B	1651A	00866-01080	2
	1834A	01081-01450	2,4
	2037A	01451-01665	2,4,6
	2204A	01666-01765	2,4,6,7,
	2304A	01766-01825	2,4,6,7, 12
	2332A	01826-01865	2,4,6,7, 12,15
	2414A	01866-01991	2,4,6,7, 12,15,16
	2652A	01992-up	2,4,6,7, 12,15,16, 21

MODEL	SERIAL Prefix	SERIAL Number	MAKE CHANGES
ALL			ERRATA
6274B	1643A	02171-02330	1,2
	1712A	02331-04440	1,2,3
	2031A	04441-06025	1,2,3,6
	2241A	06026-06075	1-3,6,10
	2245A	06076-06075	1-3,6,10, 11
	2305A	06276-06475	1-3,6, 10,11,13
	2323A	06476-07975	1-3,6,10, 11,13,14
	2537A	07976-08200	1-3,6,10, 11,13,14, 18
	2552A	08201-08250	1-3,6,10, 11,13,14, 18
	2607A	08251-up	1-3,6,10, 11,13,14, 18,22

ERRATA:

In paragraph 5-18, change the reference of Figure 5-2 to "fig. 5-2A."

In paragraph 5-25, change the second reference to figure 5-2A to read "fig. 5-2B."

To correct errors in the battery discharging procedure: Change the word "negative" to "positive" (3 places) and the "positive" to "negative" (2 places) in steps c through e of paragraph 3-86. with the line between the supply's negative output and the battery's positive terminal. (c) Move the battery end of the 10 k resistor from the negative battery terminal to the positive one.

Add the following notice to paragraph 1-16: "Effective December 1, 1975, extra manuals may be obtained by ordering Option 910 when ordering your instrument. The number of extra manuals depends on the number of Option 910's ordered.

Effective January 1, 1977, Option 007 (10-turn voltage control) and 008 still available combined as Option 009. Likewise, Options 013 (10-turn voltage control with decadial) and 014 (10-turn current control with decadial) are no longer available individually, but they are available combined into a single new option designated Option 015. Options 020 and 021 (voltage and current programming adjustments) are also no longer available individually, but they are still available combined as Option 022. Make these changes wherever Option 007, 008, 013, 014, 020, or 021 is mentioned in the manual.

In Table 1-1, add the statement: "No line cord is provided with the 6256B, 6264B, 6267B, or 6274B": after the first sentence under Input Power Connections.

Add three 3/8-32 nylon hex nuts, HP P/N 2950-0144, to the parts list under A3 Front Panel Ass'y. Mechanical. These hex nuts mount the binding posts added by Change 2.

In Models 6256B, 6263B,6264B, 6265B, 6266B, 6267B, 6271B, and 6274B, change variable resistor R122, R124, R126, R128 (p. 6-18) to 20k, 1/2 W, HP P/N 2100-0558.

For all instruments delivered on or after July 1, 1978, change fuseholder to fuseholder body, HP P/N 2110-0564, and fuseholder carrier, HP P/N 2110-0565. Change fuseholder nut to HP P/N 2110-0569. If old fuseholder must be replaced for any reason, replace complete fuseholder and nut with new fuseholder parts. Do not replace new parts with old parts.

In replaceable parts table on page 6-6, change HP P/N of SCR A1CR57 to 1884-0058 In Table 5-2 on page 5-9, change the normal VDC readings in steps 2 and 3 to read: "6.2 +/-5%".

In the replaceable parts list on page 6-6 change Q24 to HP P/N 1854-0823.

In the replaceable parts list, page 6-13 under A2 RFI filter Ass'y. Mechanical make the following changes: Change PC board mounting standoff, .938" (qty 4) HP P/N 0380-0576 to Standoff, Hex, Male/female .938" LG steel, HP P/N 0380-1497. Change cover standoff, .312" (Qty 4) HP P/N 0380-0356 to Standoff, Hex, Male/female .312" LG steel HP P/N 0380-1496 (qty 4).

In Table 5-2, on page 5-9, change the Normal DVC in steps 2 and 3 to 6.2 +/-5%.

On page 6-1, in the second sentence of paragraph 6-2, change Table 6-3 to Table 6-4. Make the same change in subheading f. and in paragrpah 6-4.

On page 6-6, change the P/N of CR57 to 1884-0058.

On page 6-2, under Chassis Electrical, chan ge B1 to ball bearing fan, HP P/N 3160-0369.

Change the part number of DS1 to 1450-0566. This new light is more reliable than the former one.

The value of R108, which determines the maximum crowbar trip voltage, is no longer specified. Instead this resistor is selected for optimum performance in each unit. The nominal values for R108 are as follows: In the Models 6256B, 6264B, 6265B, 6266B, and 6267B, the nominal value for R108 is 2k, 1%, 1/8W, HP P/N 0757-0283. In the Model 6263B is 2.37k, 1%, 1/8W, HP P/N 0698-3150. In the models 6271B and 6274B it is 3k, 2%, 1/8W, HP P/N 0757-0935. Make these corrections to the schematics, the schematic tables, and the parts list.

Delete the Microfiche part number from the title page.

The drift specification for this power supply is oriented towards the systems designer and therefore based on remote programming. The specification is realizing a low temperature coefficient (<10ppm/ degree C) programming resistance. If the output is set via the front panel controls, the drift may be ten times indicated value.

CHANGE 1:

In the Models 6256B, 6264B, 6267B, and 6274B only, A2R3 in the RFI Filter Ass'y. has been changed to 22 ohms, 2 W, HP P/N 0698-3609. Make this change to the parts list and to Figure 7-4 schematic.

CHANGE 2:

The front panel binding posts have been changed to a type with better designed insulation. Delete the two types of posts listed under A3 on page 6-14 and add: black binding post, HP P/N 1510-0107, (qty 1); and red binding post, HP P/N 1510-0091, (qty 2).

CHANGE 3:

The red barrier strip cover listed in the manual for the ac input to the 5-inch models has been deleted to be replaced by a new strain relief assembly, HP P/N 5060-2744. This assembly includes a new transparent barrier strip cover, which is attached to the supply when it is shipped.

The remaining parts are partially assembled and enclosed in a protective bag in the shipping carton. Installation instructions are also enclosed. The strain relief assembly must be attached when the power supply is installed to reduce the possible hazard of an accidental disconnecting of the ac power cable. The complete assembly includes:

1. machine screw, 6-32 1.25 in. HP P/N 2460-0020

2. barrier block cover (qty 1) HP P/N 5060-2741

3. strain relief support (qty 1) HP P/N 5060-2721

4. strain relief bracket (qty 1) HP P/N 5020-2565

5. machine screw, 8-32 0.875 in. (qty 2) HP P/N 2515-0007

CHANGE 4:

In all models change capacitor A1C28 to .015uF (RIFA cap.), HP P/N 0160-3969. In Model 6263B only, change capacitor A1C5 to 4700pF, HP P/N 0160-0157, Add ferrite bead, HP P/N 9170-0894, to emitter of transistor Q4.

CHANGE 5:

In the model 6266B only, add ferrite bead, HP P/N 9170-0894, to the replaceable parts list and to Figures 7-6 and 7-7. The ferrite bead is placed over the emitter lead of transistor Q4.

CHANGE 6:

In all models change resistor A1R39 to 100k, 5%, 1/2 W HP P/N 0686-1045.

CHANGE 7:

In the replaceable parts list, page 6-6 add L1 ferrite bead HP P/N 9170-0894 Qty (1). In the power supply L1 is located on the emitter of A1Q4.

CHANGE 8:

In the replaceable parts list, page 6-16, under Option 005, R74 will now also apply to Model 6267B.

CHANGE 9:

*This change also applies to instruments with Serial Numbers 2032A-04333, 04335, 04336, 04341, 04349, 04360, 04365, and 04367.

In the replaceable parts list, page 6-16, under Option 005, R74 will now also apply to Model 6264B.

CHANGE 10:

In Section I, on page 1-1, change the last sentence of paragraph 1-6 to read: "...or the supply's output may be floated at up to 120 volts above ground."

CHANGE 11:

In the replaceable parts list page 6-10 under A3 Front Panel Electrical, delete capacitors C28-30 HP P/N 0160-2568, qty 3. On page 6-11 under Rear Panel Electrical, add capacitors C28-30, 0.1uF, 250Vac, HP P/N 0160-4355, qty 3.

CHANGE 12:

On page 1-1, paragraph 1-6, change the last sentence to read ..."the supply's output may be floated at up to 120 volts above ground.

CHANGE 13:

In the replaceable parts list, page 6-10, under A3 Front Panel Electrical, add the following part to Model 6274B: Fuse, F1, 400mA, slow blow, 250V, HP P/N 2100-0340, Qty 1.

On page 6-13 under A3 Front Panel Ass'y. Mechanical add the following parts to model 6274B; Fuseholder Body HP P/N 2110-0564, Qty 1, Fuseholder Cap HP P/N 2110-0565, Qty 1, Fuseholder Nut HP P/N 2110-0569, Qty 1.

On page 6-18 under Option 027 and 028 add Fuse, F1, 250mA, slow blow, HP P/N 2110- 0201, Qty 1.

On the schematic Figure 7-4 add F1 as shown below to the 6274B.

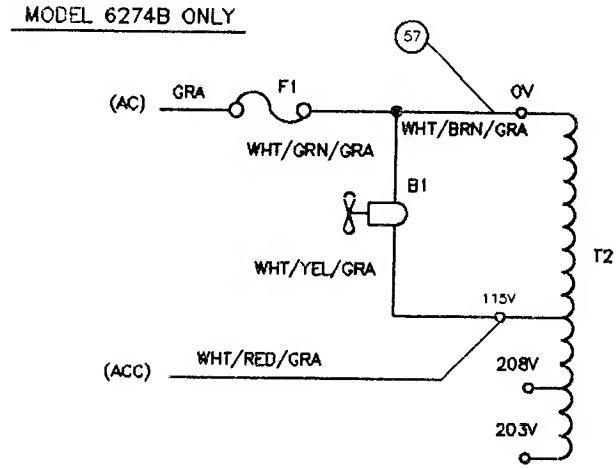

CHANGE 14:

Add Bushing (rubber) HP P/N 1251-6532 Qty 1 to the Strain Relief Assembly HP P/N 5060-2744 added in Change 3. On the strain Relief Installation Instructions (provided with each power supply) Bushing (rubber) should be listed as Item #10. Also, change step#2 to read as follows: Route the cable lugs through the rubber bushing then up to the lower connection screws and connect them.

CHANGE 15:

In the replaceable parts list, page 6-11, delete S1 HP P/N 3101-0946, and add S1, line switch, HP P/N 3101-2456, qty 1.

ERRATA:

The drift specification for this power supply is oriented towards the systems designer and therefore based on remote programming. The specfication is realized utilizing a low temperature coefficient (10ppm/degree C) programming resistance. If the output is set via the front panel controls, the drift may be ten times the indicated value.

In the replaceable parts list, page 6-13, under A1 Board Mechanical, change barrier strip, 15 terminal to HP Part No. 0360-2181 and barrier strip 11 terminal to HP Part No. 0360-2178.

This change only applies to Models 6264B, 6267B and 6274B. In the replaceable parts list, page 6-14, change TB2 to HP P/N 0360-2199.

In the replaceable parts list, page 6-13 under A1 Main PC Board Mechanical, change barrier strip jumpers (qty.6) and (qty.7) to HP P/N 0360-1935.

CHANGE 16:

In the replaceable parts list, page 6-15, for Models 6263B,-65B,-66B,-71B, change the rear panel HP Part No. to 5020-2666. On the same page, for the same models change grommet, 7/8", (qty 2), to grommet-strain relief, HP Part No. 0400-0013, qty 1, and line cord to HP Part No. 8120-0050, qty 1.

CHANGE 17:

*This change also pertains to units having serial numbers 2345A-02184 through 2345A-02227. In HP Model 6265A only, add on page 6-6, A1L1, ferrite bead, 0.6uh HP P/N 9170-0894. On the schematic (figure 7-3) A1L1 is added to the emitter of A1Q3.

CHANGE 18:

In the replaceable parts list delete capacitors C28,29,30 which were moved due to CHANGE 11 from the Front Panel Electrical to the Rear Panel Electrical. Add on the bottom of page 6-11, RFI Board Assembly, HP P/N 5060-2876, TQ 1. The RFI Board consists of the following components; C28,C29, fxd met, .01uf, 10% HP P/N 0160-4355, TQ 2, C30, fxd poly, 1.0uf, 20%,HP P/N 0160-4962, TQ 1 and R22, fxd comp, 820K, 5%, 1/2W, HP P/N 0686-8245, TQ 1.

On the schematic diagram figure 7-4 for Models 6256B,64B,67B and 74B add the RFI Board Assembly to the schematic as illustrated above.

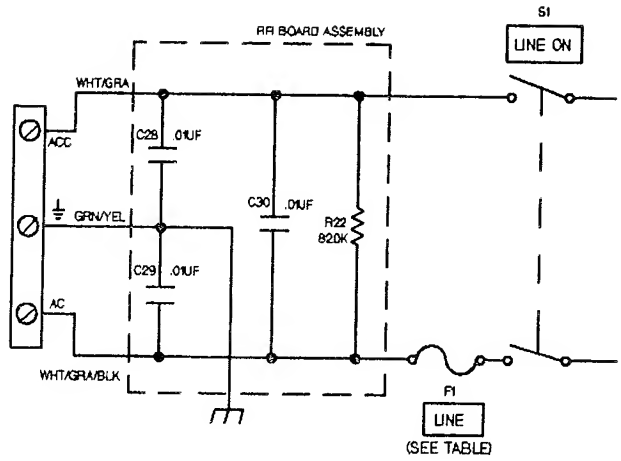

*CHANGE 19:

This change also applies to the serial numbers listed below.

6263B:

2417A-04441, 2417A-04503, 2417A-04519, 2417A-04549, 2417A-04600, 2417A-04602 thru 2417A-04621

6266B:

2419A-04976, 2419A-05021, 2419A-05185, 2419A-05301 thru 05306, 2419A-05058 thru 05060, 2419A-05311, 2419A-05336 thru 2419A-05365

In the replaceable parts list, under Rear Panel Electrical change Q3 to HP P/N 1854-0072, under A1 Board Electrical add C80, 0.047uf, 10%,100VDC, HP P/N 0160-4834, TQ 1. On the schematic diagram, Figure 7-7, add C80 from the base to collector of Q6. On the A1 Component Location drawing, Figure 7-6, C80 is added where Q3 for the 6265B was once installed (ref. near center of PC Board.)

*CHANGE 20:

This change only applies to Model 6263B option 005 and will also include serial numbers; 2546A-04622 and 2546A-04623.

In the replaceable parts list, page 6-16, under OPTION 005 50Hz AC Input, add Model number 6263B to resistor R74 (this resistor is now included in the 6263B).

CHANGE 21:

For Model 6274B, on page 6-11, under Rear Panel Electrical change Q3 to HP P/N 1854-0917 and for Model 6271B on page 6-12, under Chassis Electrical change Q3 to HP P/N 1854-0917.

CHANGE 22:

In the replaceable parts list, page 6-11, under Rear Panel Electrical, change Q6-7 for model 6274B to HP P/N 1854-1096.

2/6/86

SECTION I
GENERAL INFORMATION

1-1 DESCRIPTION

1-2 The eight constant-voltage/constant-current power supply models included in this manual use a transistor series-regulator combined with a triac preregulator for high efficiency, excellent regulation, and low ripple and noise. These supplies are suitably packaged for either bench or relay rack operation. The Models 6256B, 6264B, 6267B, and 6274B are housed in a 5 1/4-inch high full-rack-width cabinet, and the Models 6263B, 6265B, 6266B, and 6271B are housed in a similar 3 1/2-inch high cabinet.

1-3 The outputs of these supplies can be varied from zero to full rated voltage or current by setting coarse and fine voltage and current controls on the front panel or they can be programmed remotely by resistance or voltage inputs to rear panel terminals. When the voltage controls are used to establish a constant output voltage, the current controls establish a current limit that can protect the load from overcurrent; when the current controls are used to establish a constant output current, the voltage controls establish a voltage limit that can protect the load from excessive voltage. The crossover from constant-voltage to constant-current operation, or vice versa, occurs automatically when the load current reaches the value established by the current controls or the voltage reaches the value established by the voltage controls. The output voltage and current can both be monitored continuously on front panel meters.

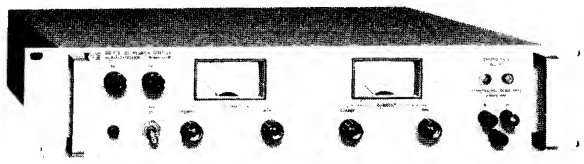

MODELS 6263B, 6265B, 6266B, 6271B

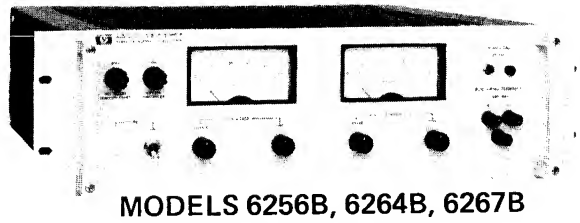

MODELS 6256B, 6264B, 6267B

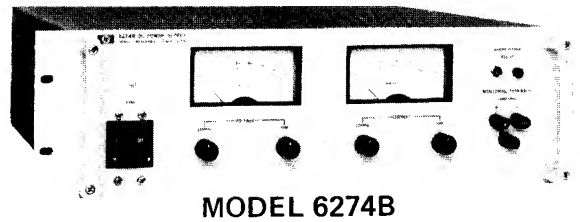

MODEL 6274B

1-4 Output loads are further protected by a built-in fast-acting overvoltage protection crowbar circuit that automatically shorts the supply's output terminals if a preset voltage limit is exceeded. A front panel control sets the voltage at which the crowbar trips and can be adjusted from approximately 10% to 110% of the supply's maximum rated voltage. When several supplies are installed in the same system, whether in series, parallel, or independently, their crowbar circuits can be interconnected so that all will trip simultaneously whenever any one of them does.

1-5 The Model 6274B supply is forced-air cooled; the other models covered by this manual are cooled by convection.

1-6 The ac input connections to the supplies in 5 1/4-inch cabinets are made at rear panel terminals; the 3 1/2-inch units are equipped with 3-wire line cords. All dc output, remote sensing, and remote programming connections are made at rear panel terminals. (The output terminals on the front panel are for monitoring purposes only and are rated at 3 amps maximum.) Either the positive or negative output terminal of a supply may be grounded or the supply's output may be floated at up to 300 volts above ground.

1-7 Remote programming, remote sensing, and several methods of operating supplies in combinations of two or three are made possible by rear panel terminals that allow access to control points within the regulator circuits. These capabilities are described below.

a. Remote Programming. The power supply's output voltage or current (or both) can be controlled from a remote location by varying a resistance or a voltage input signal to the supply's voltage or current regulator circuit.

b. Remote Sensing. Connecting the voltage regulator's feedback circuit to the load terminals rather than to the supply's output terminals prevents the voltage drop in the load leads from impairing voltage regulation at the load

when operating in the constant voltage mode. A separate pair of sensing leads which carry no load current extend the feedback loop to the load terminals.

c. Auto-Parallel Operation. Two or three similar supplies connected in parallel can be made to share loads equally and can be controlled by the voltage and current controls (or remote programming terminals) of one of the supplies designated the master if they are connected for auto-parallel operation. Normally, only supplies having the same model number are connected in auto-parallel, but auto-parallel operation can be used with any of the supplies covered by this manual that have equal current capabilities.

d. Auto-Series Operation. Two or three supplies can be connected in series and have their outputs simultaneously controlled by the voltage and current controls (or remote programming terminals) of one of the supplies designated the master. The voltage contributed by each slave is maintained in a constant ratio to that of the master. These ratios can be set as desired. Auto-series operation provides higher output voltages in constant voltage operation and greater voltage compliance in constant current operation. Any HP supply that offers auto-series operation can serve as a slave supply; the master supply does not have to be an auto-series model.

e. Auto-Tracking Operation. Auto-tracking is similar to auto-series operation except that two or three supplies share a common negative output bus and are interconnected so that the output voltage of each slave supply is maintained at some constant fraction of that of the master supply. All of the supplies are controlled through the master supply, and each supply feeds a separate load.

1-8 SPECIFICATIONS

1-9 Detailed specifications for these power supplies are given in Table 1-1.

1-10 OPTIONS

1-11 Options are customer-requested factory modifications of a standard instrument. The following options are available for the instruments covered by this manual. Where necessary, detailed coverage of the options is included throughout the manual.

Option No.	Description
005	Realignment for 50Hz Operation: Standard instruments are designed for 57 to 63Hz operation. For 50Hz operation, several resistors in the preregulator control circuit are changed in value and the preregulator is realigned.
007	Ten-Turn Output Voltage Control: A ten-turn control replaces the coarse voltage control for improved resolution in setting the output voltage.
008	Ten-Turn Output Current Control: A ten-turn control replaces the coarse current control for improved resolution in setting the output current.
009	Ten-Turn Output Voltage and Current Controls: This option includes Options 007 and 008 in the same instrument.
010	Chassis Slides: Factory installed slides permit convenient access to the interior of a rack-mounted supply for maintenance.
013	Three-Digit Graduated Decadial Voltage Control: To improve mechanical stability and permit accurate resetting of the output voltage, Option 013 replaces the coarse voltage control with a ten-turn control equipped with a 3-digit turns-counting dial.
014	Three-Digit Graduated Decadial Current Control: To improve mechanical stability and permit accurate resetting of the output current, Option 014 replaces the coarse current control with a ten-turn control equipped with a 3-digit turns-counting dial.
020	Adjustable Voltage Programming: Two screwdriver-adjustable controls mounted on the rear panel allow the voltage programming coefficient and zero output voltage to be adjusted conveniently to an accuracy of 0.1%.
021	Adjustable Current Programming: Two screwdriver-adjustable controls mounted on the rear panel allow the current programming coefficient and zero output current to be adjusted conveniently to an accuracy of 0.1%.
022	Adjustable Voltage and Current Programming: This option includes Options 020 and 021 in the same instrument.
027	Rewiring for 208Vac ±10% Single-phase Input: This factory modification reconnects the input transformers and the preregulator choke, and replaces the fuses and the pilot light resistor for 208Vac operation.

028 Rewiring for 230Vac ±10% Single-phase Input: This factory modification reconnects the input transformers and the preregulator choke, and replaces the fuses and the pilot light resistor for 230Vac operation.

040 Interfacing for Multiprogrammer Operation: This factory modification prepares standard power supplies for resistance programming by the 6940B Multiprogrammer or the 6941B Multiprogrammer Extender. Operation with either of these instruments requires that the power supply be subjected to a special calibration and a protection checkout. The special calibration insures that the power supply can be accurately set to zero and to the maximum rated output voltage or current when programmed by the multiprogrammer. The protection checkout insures that the power supply will not be damaged by the rapid repetitive programming possible with the multiprogrammer. This option includes Option 022.

1-12 INSTRUMENT/MANUAL IDENTIFICATION

1-13 Hewlett-Packard power supplies are identified by a two-part serial number. The first part is the serial number prefix, a number-letter combination that denotes the date of a significant design change and the country of manufacture. The first two digits indicate the year (10 = 1970, 11 = 1971, etc.), the second two digits indicate the week, and the letter "A" designates the U. S. A. as the country of manufacture. The second part is the power supply serial number. A different sequential number is assigned to each power supply, starting with 00101.

1-14 If the serial number on your instrument does not agree with those on the title page of the manual, Change Sheets supplied with the manual define the differences between your instrument and the instrument described by this manual.

1-15 ORDERING ADDITIONAL MANUALS

1-16 One manual is shipped with each power supply. Additional manuals may be purchased from your local Hewlett-Packard field office (see list at rear of this manual for addresses). Specify the model number, serial number prefix, and HP part number shown on the title page.

Table 1-1. Specifications: Models 6256B, 6263B, 6264B, 6265B, 6266B, 6267B, 6271B, and 6274B.

INPUT:

115Vac ±10%, single phase, 57-63Hz for the standard models. (For other input voltages or 50Hz operation, see the option listings in paragraph 1-10. Input power requirements are listed in paragraph 2-15.

OUTPUT:

Model 6256B	0-10 volts at 0-20 amps
6263B	0-20 volts at 0-10 amps
6264B	0-20 volts at 0-20 amps
6265B	0-40 volts at 0-3 amps
6266B	0-40 volts at 0-5 amps
6267B	0-40 volts at 0-10 amps
6271B	0-60 volts at 0-3 amps
6274B	0-60 volts at 0-15 amps

LOAD EFFECT (LOAD REGULATION):

Constant Voltage – Less than 0.01% of output plus 200μV for a load change equal to the current rating of the supply.

Constant Current – Less than 0.02% of output plus 500μA for a load change equal to the voltage rating of the supply.

SOURCE EFFECT (LINE REGULATION):

Constant Voltage – Less than 0.01% of output plus 200μV for a change in line voltage between 104 and 127Vac (or 208 and 254Vac) at any output voltage and current within rating.

Constant Current – Less than 0.02% of output plus 500μA for a change in line voltage between 104 and 127Vac (or 208 and 254Vac) at any output voltage and current within rating.

PARD (RIPPLE AND NOISE):

Constant Voltage – Less than 200μV rms or 10mV p-p, 20Hz to 20MHz (except for the Model 6274B, which has less than 200μV rms or 20mV p-p).

Constant Current –

Models 6256B, 6264B, and 6274B – Less than 5mA rms, 20Hz to 20MHz.

Models 6263B, 6265B, 6266B, 6267B, and 6271B – Less than 3mA rms, 20Hz to 20MHz.

TEMPERATURE COEFFICIENT:

Constant Voltage – Less than 0.01% plus 200μV change in output per degree Celsius change in ambient following a 30-minute warmup.

Constant Current –

Models 6256B, 6263B, 6264B, and 6274B – Less than 0.01% plus 2mA change in output per degree Celsius change in ambient following a 30-minute warmup.

Models 6265B, 6266B, 6267B, and 6271B – Less than 0.01% plus 1mA change in output per degree Celsius change in ambient following a 30-minute warmup.

Table 1-1. Specifications: Models 6256B, 6263B, 6264B, 6265B, 6266B, 6267B, 6271B, and 6274B (continued).

DRIFT (STABILITY):

(Change in output (dc to 20Hz) over an 8-hour interval under constant line, load, and ambient temperature following a 30-minute warmup.)

Constant Voltage — Less than 0.03% of output plus 500μV (except for the Models 6267B and 6274B, which have a drift of less than 0.03% of output plus 2mV).

Constant Current —

Models 6256B, 6263B, and 6264B — Less than 0.03% of output plus 6mA.

Models 6265B, 6266B, 6267B, and 6271B — Less than 0.03% of output plus 3mA.

Model 6274B — Less than 0.03% of output plus 5mA.

RESOLUTION:

(Minimum output voltage or current change that can be obtained using the front panel controls.)

Model	Constant Voltage	Constant Current
6256B	1mV	20mA
6263B	2mV	10mA
6264B	2mV	20mA
6265B	5mV	3mA
6266B	5mV	5mA
6267B	5mV	10mA
6271B	10mV	3mA
6274B	10mV	15mA

OUTPUT IMPEDANCE (TYPICAL):

Approximated by a resistance in series with an inductance as follows:

Model		Model	
6256B	0.1mΩ, 1μH	6266B	1mΩ, 1μH
6263B	0.5mΩ, 1μH	6267B	0.5mΩ, 1μH
6264B	0.2mΩ, 1μH	6271B	5mΩ, 1μH
6265B	2mΩ, 1μH	6274B	1mΩ, 1μH

LOAD TRANSIENT RECOVERY TIME:

Less than 50μsec is required for output voltage recovery (in constant voltage operation) to within 10mV of the nominal output following a change in output current equal to the current rating of the supply or 5 amps, whichever is smaller.

OVERVOLTAGE PROTECTION CROWBAR:

To avoid false tripping, the recommended trip margin above the output voltage is 5% of the output voltage plus 1 volt. The approximate crowbar trip voltage ranges are:

Model 6256B	2V–12V	Model 6266B	2.5V–45V
6263B	2V–23V	6267B	2.5V–45V
6264B	2.5V–23V	6271B	6V–66V
6265B	2.5V–45V	6274B	6V–66V

REMOTE PROGRAMMING COEFFICIENTS:

Output Voltage Programming

Model	Resistance Control (±1%)	Voltage Control (±1%)
6256B	200Ω/V	1V/V
6263B	200Ω/V	1V/V
6264B	200Ω/V	1V/V
6265B	200Ω/V	1V/V
6266B	200Ω/V	1V/V
6267B	200Ω/V	1V/V
6271B	300Ω/V	1V/V
6274B	300Ω/V	1V/V

Output Current Programming —

Model	Resistance Control (±10%)	Voltage Control (±10%)
6256B	10Ω/A	25mV/A
6263B	100Ω/A	50mV/A
6264B	10Ω/A	25mV/A
6265B	300Ω/A	167mV/A
6266B	200Ω/A	100mV/A
6267B	100Ω/A	50mV/A
6271B	300Ω/A	167mV/A
6274B	67Ω/A	33.3mV/A

REMOTE PROGRAMMING SPEED:

(Typical time required to nonrepetitively change from zero to within 99.9% of the maximum rated output voltage, or from the maximum rated output voltage to within 0.1% of that voltage above zero.)

Model	Up, Full Load	Down, Full Load
6256B	60ms	40ms
6263B	150ms	60ms
6264B	140ms	80ms
6265B	275ms	400ms
6266B	275ms	275ms
6267B	275ms	140ms
6271B	600ms	200ms
6274B	600ms	40ms

Model	Up, No Load	Down, No Load
6256B	60ms	5 sec
6263B	150ms	7 sec
6264B	140ms	10 sec
6265B	275ms	12 sec
6266B	275ms	13 sec
6267B	275ms	13 sec
6271B	600ms	7 sec
6274B	600ms	40 sec

Table 1-1. Specifications: Models 6256B, 6263B, 6264B, 6265B, 6266B, 6267B, 6271B, and 6274B (continued).

PANEL METERS:

The accuracy of the front panel voltmeter and ammeter is ±2% of full scale. The ranges of these meters are:

Model 6256B	12V, 24A	Model 6266B	50V, 6A
6263B	24V, 12A	6267B	50V, 12A
6264B	24V, 24A	6271B	70V, 4A
6265B	50V, 4A	6274B	70V, 18A

TEMPERATURE RATINGS:

Operating 0 to 55°C
Storage –40 to +75°C

COOLING:

Convection cooling is used except in the Model 6274B, which is forced air cooled by a single fan.

OPTIONS AVAILABLE:

Options 005, 007, 008, 009, 010, 013, 014, 020, 021, 022, 027, 028, and 040. (See paragraph 1-10 for descriptions.)

INPUT POWER CONNECTIONS:

In the Models 6256B, 6264B, 6267B, and 6274B, input power is connected by way of a 3-terminal barrier strip on the rear panel. The Models 6263B, 6265B, 6266B, and 6271B are equipped with a 5-foot 3-wire line cord.

DIMENSIONS:

(See Figure 2-1 outline diagrams.)

WEIGHT:

Model	Net	Shipping
6256B	35 lbs (15.8kg)	40 lbs (18.1kg)
6263B	34 lbs (15.4kg)	41 lbs (18.6kg)
6264B	47 lbs (21.3kg)	54 lbs (24.5kg)
6265B	34 lbs (15.4kg)	41 lbs (18.6kg)
6266B	34 lbs (15.4kg)	41 lbs (18.6kg)
6267B	39 lbs (17.7kg)	46 lbs (20.8kg)
6271B	34 lbs (15.4kg)	41 lbs (18.6kg)
6274B	48 lbs (21.7kg)	54 lbs (24.5kg)

SECTION II
INSTALLATION

2-1 INITIAL INSPECTION

2-2 Before shipment, this instrument was inspected and found to be free of mechanical and electrical defects. As soon as the instrument is unpacked, inspect for any damage that may have occurred in transit. Save all packing materials until the inspection is completed. If damage is found, file a claim with the carrier immediately. The Hewlett-Packard Sales and Service office should be notified as soon as possible.

2-3 Mechanical Check

2-4 This check should confirm that there are no broken knobs or connectors, that the cabinet and panel surfaces are free of dents and scratches, and that the meter is not scratched or cracked.

2-5 Electrical Check

2-6 The instrument should be checked against its electrical specifications. Section V includes an "in-cabinet" performance check to verify proper instrument operation.

2-7 INSTALLATION DATA

2-8 The instrument is shipped ready for permanent rack installation or bench operation. It is necessary only to connect the instrument to a source of power and it is ready for use.

2-9 Location and Cooling

2-10 The Model 6274B is fan-cooled; the other models are cooled by convection. The Model 6274B must be installed with sufficient space for cooling air to reach the sides and rear of the instrument. The other models require a free flow of air past the cooling fins on the rear panel only. These power supplies should be used in an area where the ambient temperature does not exceed 55°C.

2-11 Outline Diagram

2-12 Figure 2-1 shows the outline shape and dimensions of these supplies.

2-13 Rack Mounting

2-14 This instrument is full rack size and can be easily rack mounted in a conventional 19-inch rack panel using standard mounting screws.

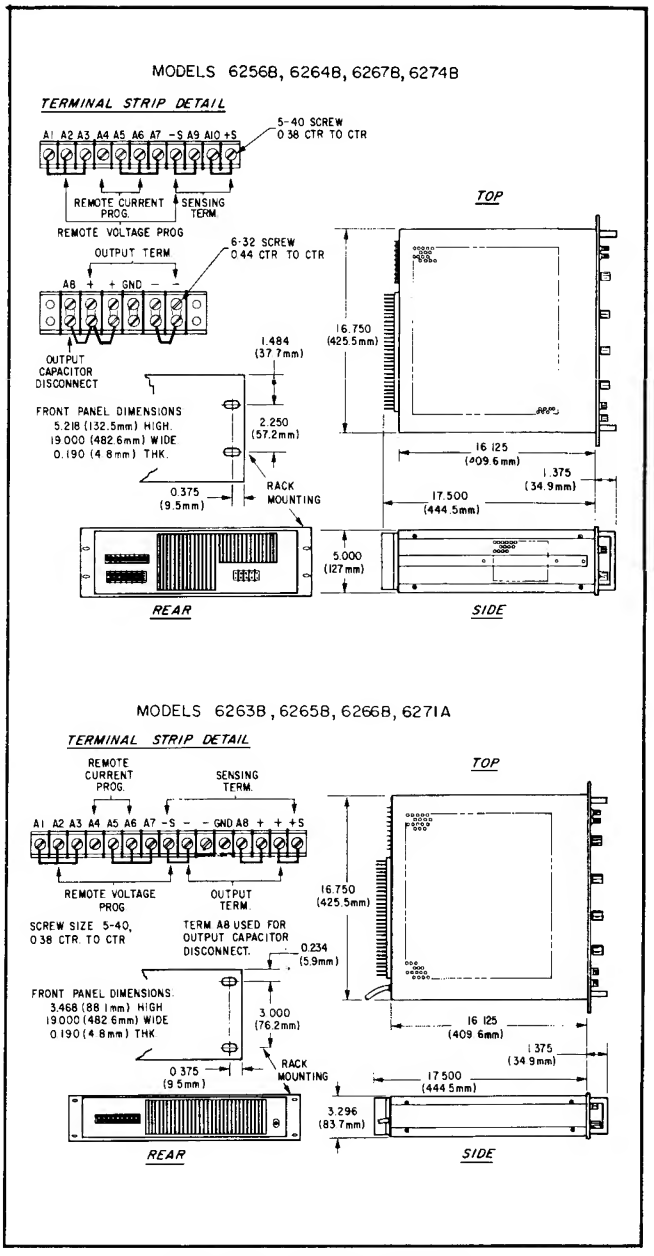

Figure 2-1. Outline Diagrams

2-15 INPUT POWER REQUIREMENTS

2-16 The standard instrument as shipped from the factory is wired for a nominal input of 115Vac 57-63Hz. Instruments with special options also available from the

factory include some equipped for 208-volt or 230-volt operation (Option 027 or 028) and for 50Hz operation (Option 005). The required input voltage and frequency is marked on the rear panel of the supply. The standard instrument can also be converted by the user to 208-volt or 230-volt and to 50Hz operation by following the instructions given in the following paragraphs. The standard instrument requires the input current and power listed below when operated at full load from a 115-volt source. When the supply is operated from a 208-volt or 230-volt source, the input current is approximately half the amount listed.

Model	Input Current	Input Power
6256B	5A	375W
6263B	4A	350W
6264B	8A	600W
6265B	3A	180W
6266B	4A	325W
6267B	8A	550W
6271B	4A	300W
6274B	15A	1200W

2-17 INPUT LINE VOLTAGE OR FREQUENCY CONVERSION

2-18 When it is wired for 115-volt operation, this power supply has the two primary windings of each of its two input transformers (T1 and T2) connected in parallel (except for bias transformer T2 in the Model 6274B, which has a single multi-tapped primary). The two windings of the pre-regulator choke (A2L1A and A2L1B) are also connected in parallel. Conversion of the supply to 208-volt or 230-volt operation involves connecting these windings in series, replacing the fuses (except in the Model 6274B), and replacing the pilot light resistor. Complete line voltage conversion instructions are given in paragraphs 2-20 and 2-22.

2-19 Converting a 60Hz instrument to 50Hz operation involves replacing several resistors and making some adjustments. Line frequency conversion instructions are given in paragraph 2-25.

2-20 Converting A Standard Instrument To 208-Volt Operation

2-21 To convert a 115-volt instrument to 208-volt operation, proceed as follows:

a. Disconnect instrument from power source and remove top and bottom covers and A2 RFI Assembly cover.

b. Replace pilot light resistor R40 (mounted on rear of pilot light DS1 on front panel) with a 120kΩ 5% 1/2W resistor. (HP Part No. 0686-1245.)

c. Remove jumpers J1, J2, and J4 from the A2 RFI Assembly circuit board and install a jumper in the position marked "J3".

d. Remove the jumpers from power transformer T1 that connect terminals 1 with 3 and 2 with 5, and install a jumper between terminals 2 and 3. (See Figure 2-2B.)

e. Disconnect T1 input lead from terminal 5 and connect it to terminal 4. (See Figure 2-2B.)

f. (Model 6274B only) Disconnect input lead from the "115V" tap on bias transformer T2 and connect it instead to the "208V" tap. Leave cooling fan B1 connected to the "115V" tap. (See Figure 2-3B.)

f. (Models 6256B through 6271B only) Remove the jumpers from bias transformer T2 that connect terminals 1 with 3 and 2 with 5, and install a jumper between terminals 2 and 3. (See Figure 2-2B.)

g. (Models 6256B through 6271B only) Disconnect T2 input lead from terminal 5 and connect it to terminal 4. (See Figure 2-2B.)

h. (Models 6256B through 6271B only) Replace bias fuse F2 with a 1/16A slo-blo fuse (HP Part No. 2110-0311).

i. (Models 6256B through 6271B only) Replace line fuse F1 with a fuse of the rating listed below.

Model	Rating		HP Part No.
6256B	5A	250V	2110-0227
6263B, 6266B, 6271B	3A	250V	2110-0003
6264B, 6267B	6A	250V	2110-0056
6265B	2A	250V	2110-0002

2-22 Converting A Standard Instrument To 230-Volt Operation

2-23 Models 6256B Through 6271B. To convert any of these models from 115-volt operation to 230-volt operation, follow the instructions given in paragraph 2-21, but omit steps (e) and (g). (Leave the input leads to T1 and T2 on terminal 5. See Figure 2-2C.)

2-24 Model 6274B. To convert the Model 6274B from 115-volt operation to 230-volt operation, follow the instructions given in paragraph 2-21, but omit step (e) and change step (f) as follows: connect the T2 input lead to the "230V" tap instead of the "208V" tap. (See Figures 2-2C and 2-3C.)

2-25 Converting A Standard Instrument To 50Hz Operation

2-26 To convert a 60Hz instrument to 50Hz operation, proceed as follows:

a. Replace R74, R76, R78, and R79 if new values are listed below. HP Part Numbers for these resistors may be found on page 6-16 of the parts list.

Model	R74	R76	R78	R79
6256B	– –	150kΩ	750Ω	– –
6263B	– –	200kΩ	270Ω	4.7kΩ
6264B	– –	200kΩ	270Ω	4.7kΩ
6265B	– –	300kΩ	270Ω	4.7kΩ
6266B	8.2kΩ	150kΩ	270Ω	4.7kΩ
6267B	– –	750kΩ	270Ω	4.7kΩ
6271B	– –	360kΩ	270Ω	4.7kΩ
6274B	– –	430kΩ	270Ω	– –

b. After replacing the necessary resistors, perform the preregulator tracking adjustment procedure given in paragraph 5-86.

c. Check the ripple balance adjustment by the procedure given in paragraph 5-84.

2-27 POWER CABLE

2-28 To protect operating personnel, the National Electrical Manufacturers Association (NEMA) recommends that the instrument panel and cabinet be grounded. Model 6263B, 6265B, 6266B, and 6271B power supplies are equipped with a three conductor power cable. When the cable is plugged into an appropriate receptacle, the instrument is grounded through the offset pin on its three-prong connector. In no event shall this instrument be operated without an adequate cabinet ground connection. To preserve the protection feature when operating the instrument from a two-contact outlet, use a three-prong to two-prong adapter (if permitted by local regulations) and connect the green lead on the adapter to ground.

2-29 Model 6263B, 6265B, 6266B, and 6271B supplies are equipped at the factory with a power cord plug appropriate for the user's location. Figure 2-4 illustrates the standard configurations of power cord plugs used by HP. Above each drawing is the HP option number for that configuration of power connector pins. Below each drawing

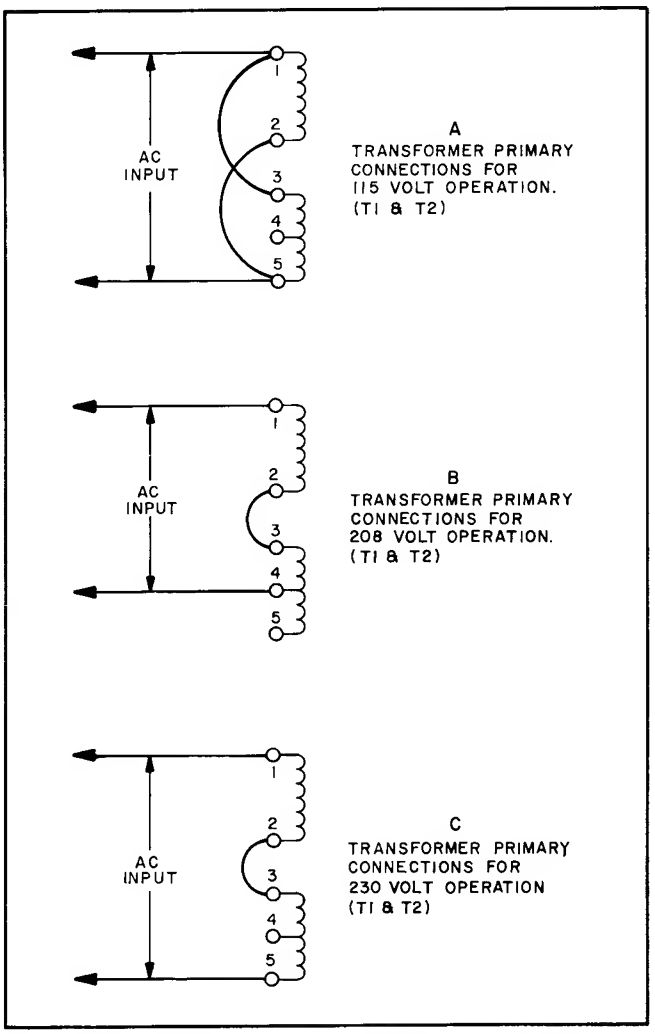

Figure 2-2. Transformer T1 and T2 Primary Connections for 208V and 230V Operation (except T2 in Model 6274B)

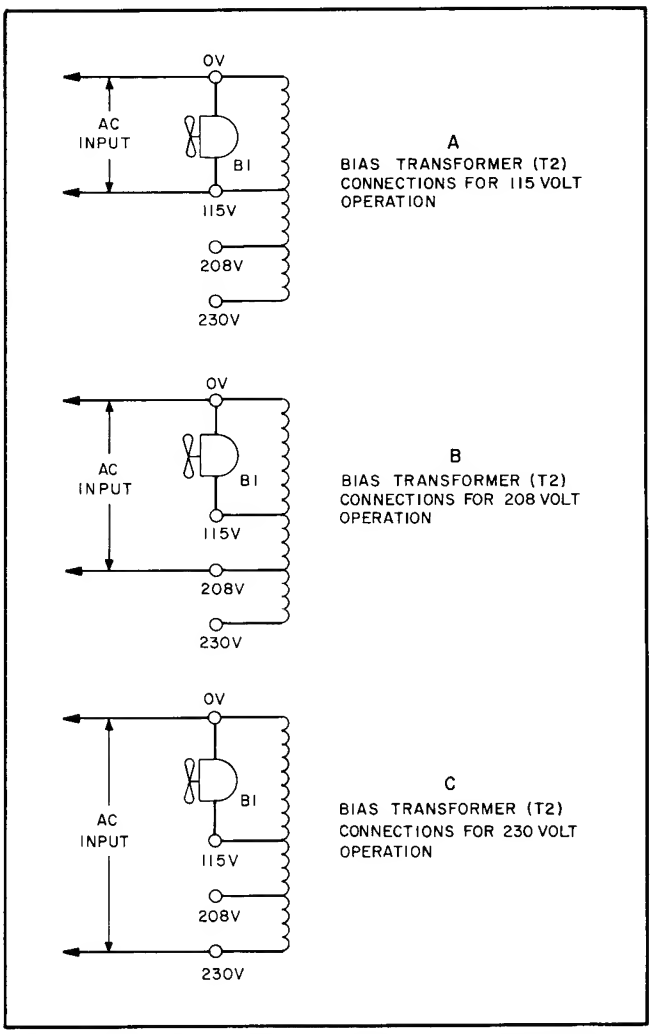

Figure 2-3. Bias Transformer T2 Primary Connections for 208V and 230V Operation (Model 6274B only)

is the HP part number for a replacement power cord equipped with a plug of that configuration. Notify the nearest HP Sales and Service Office if the appropriate power cord is not included with the instrument.

2-30 No power cable is suppliedwith Model 6256B, 6264B, 6267B, or 6274B power supplies. It is recommended that the user-supplied power cable have three conductors (with the third conductor grounded) and be of adequate wire size to handle the input current drawn by the supply (see paragraph 2-15). Note that when the supply is operated from a 208-volt or 230-volt source, the input current is approximately half that shown in paragraph 2-15.

2-31 REPACKAGING FOR SHIPMENT

2-32 To insure safe shipment of the instrument, it is recommended that the package designed for the instrument be used. The original packaging material is reusable. If it is not available, contact your local Hewlett-Packard field office to obtain the materials. This office will also furnish the address of the nearest service office to which the instrument can be shipped and provide the Authorized Return label necessary to expedite the handling of your instrument return. Be sure to attach a tag to the instrument which specifies the owner, model number, full serial number, and service required, or a brief description of the trouble.

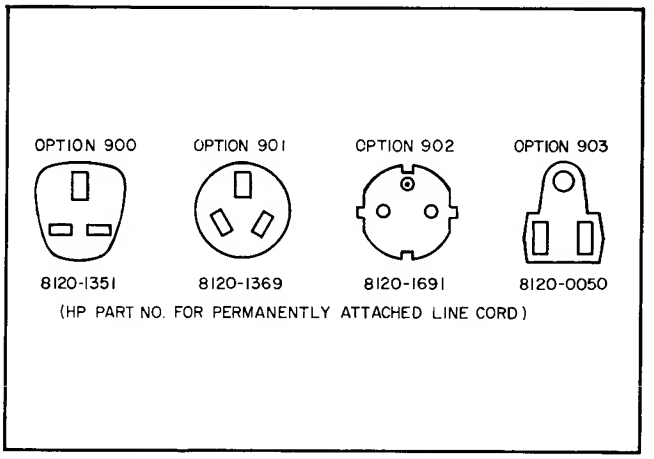

Figure 2-4. Power Cord Configurations

SECTION III
OPERATING INSTRUCTIONS

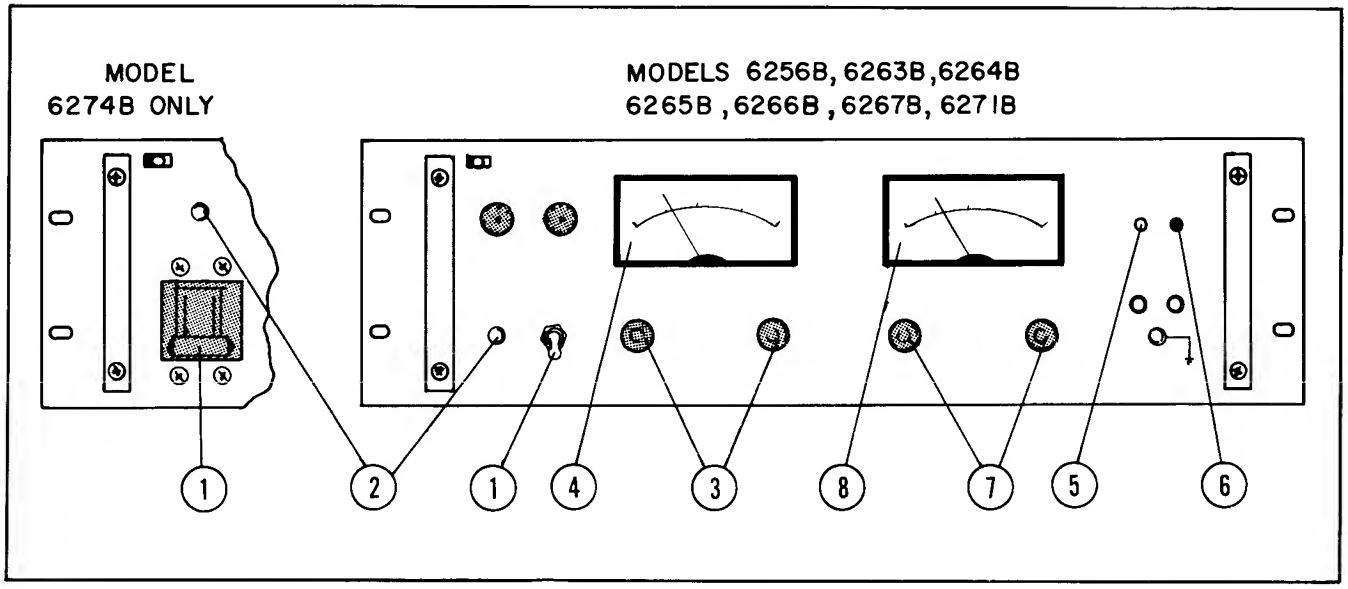

Figure 3-1. Front Panel Controls and Indicators

3-1 TURN-ON CHECKOUT PROCEDURE

3-2 The following steps describe the use of the front panel controls and indicators illustrated in Figure 3-1 and serve as a brief check that the supply is operational. This checkout procedure or the more detailed performance test of paragraph 5-5 should be followed when the instrument is received and before it is connected to any load equipment. Proceed to the more detailed test and troubleshooting procedures in Section V if any difficulties are encountered.

a. Turn CURRENT controls ⑦ and OVERVOLTAGE ADJUST potentiometer ⑤ fully clockwise and check that rear panel straps are connected as shown in Figure 3-2, but do not connect load R_L.

——CAUTION——

Do not energize a Model 6256B, 6264B, 6267B, or 6274B supply unless the jumpers are installed that connect together the two (+) terminals and the two (−) terminals.

b. Plug in line cord (Models 6263B, 6265B, 6266B, 6271B) or connect ac power of the appropriate voltage and frequency to the rear panel ac and acc terminals (Models 6256B, 6264B, 6267B, 6274B). The supply's input rating is identified on its rear panel.

——CAUTION——

Do not interchange the ac and acc input lines; connect the ac input terminal to the hot side and the acc input terminal to the grounded side of the ac line. Do not fail to connect the input ground terminal (⏚) securely to an external earth ground.

c. Set LINE switch or circuit breaker ① ON and observe that pilot lamp ② lights.

d. Adjust COARSE and FINE VOLTAGE controls ③ for desired indication on voltmeter ④

e. Ensure that overvoltage crowbar circuit is operational by slowly turning OVERVOLTAGE ADJUST control ⑤ counterclockwise with a screwdriver until OVERVOLTAGE lamp ⑥ lights and voltmeter indication drops to zero volts.

f. Reset crowbar by returning OVERVOLTAGE ADJUST control to its maximum clockwise position and turning off the supply. On turning the supply back on, the voltage should be the same value as was set in step (d).

g. To check the constant current circuit, first turn off the supply, connect a short across the rear panel output

terminals (see Figure 3-2), and turn it back on.

NOTE

The front panel MONITORING TERMINALS are intended only for monitoring the supply's output. They cannot be used for measuring the supply's performance specifications. These terminals have a 3-amp current limitation.

h. Adjust COARSE and FINE CURRENT controls ⑦ until ammeter ⑧ indicates desired output current or current limit. (The VOLTAGE controls must be set for a greater-than-zero output to obtain the output current programmed.)

i. Turn off the supply, remove the short from its output, and read the remainder of these operating instructions before connecting the supply to an actual load.

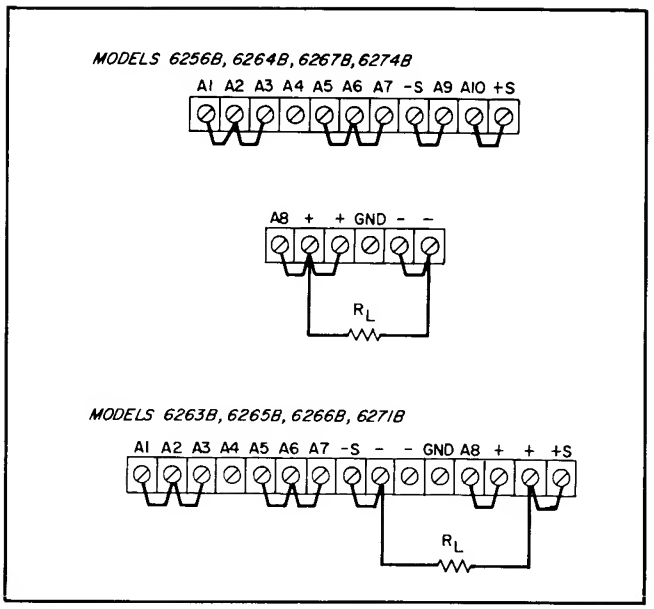

Figure 3-2. Normal Strapping Patterns

3-3 OPERATING MODES

3-4 This power supply is designed so that its mode of operation can be selected by making strapping connections between terminals on its rear panel. The following paragraphs first describe normal operation using the normal strapping pattern as it is connected at the factory. Later paragraphs cover some optional operating modes including remote voltage sensing, remote programming, and some methods of operating these power supplies in combinations of two or three.

3-5 The DC Power Supply Handbook, Application Note 90A, is a useful source of additional information on using regulated power supplies effectively. This 138-page handbook includes chapters on operating principles, ac and load connections, optional operating modes, and performance measurements and is available at no charge from your local HP sales office. The address of your local sales office can be found in the back of this manual.

3-6 NORMAL OPERATING MODE

3-7 This power supply was shipped with the proper rear panel strapping connections made for constant-voltage/constant-current operation with local sensing and local programming. This strapping pattern is illustrated in Figure 3-2. By means of the front panel voltage and current controls, the operator selects either a constant-voltage or a constant-current output. Whether the supply functions in the constant-voltage or the constant-current mode depends on the settings of the voltage and current controls and on the resistance of the output load. For values of load resistance greater than a critical crossover value equal to the voltage setting divided by the current setting, the supply operates in the constant-voltage mode. With a load resistance smaller than this critical value, it operates in the constant-current mode. The transition occurs automatically; no switches need to be operated or connections changed.

3-8 Constant Voltage Operation

3-9 To adjust the supply for constant voltage operation:

a. Turn on supply and, with output terminals open, adjust the VOLTAGE controls for the desired output voltage.

b. Connect a short across the rear panel output terminals and adjust the CURRENT controls for the desired maximum output current. If a load change causes this current limit to be exceeded, the supply automatically crosses over to constant current operation at this preset current limit and the output voltage drops proportionately. In setting the current limit, make an adequate allowance for high peak currents that could cause unwanted crossover. (Refer to paragraph 3-69.)

3-10 Constant Current Operation

3-11 To adjust the supply for constant current operation:

a. Connect a short across the rear output terminals and adjust the CURRENT controls for the desired output current.

b. Open the output terminals and adjust the VOLTAGE controls for the desired maximum output voltage. If a load change causes this voltage limit to be exceeded, the supply automatically crosses over to constant voltage operation at this preset voltage limit and the output current drops

proportionately. In setting the voltage limit, make an adequate allowance for high peak voltages that could cause unwanted crossover. (Refer to paragraph 3-69.)

3-12 Overvoltage Trip Point Adjustment

3-13 The crowbar trip voltage is adjusted by using the screwdriver control on the front panel. The approximate trip voltage ranges are listed in Table 1-1. When the crowbar trips, an SCR shorts the output and the amber OVER-VOLTAGE indicator on the front panel lights. Rotating the control clockwise sets the trip voltage higher. (It is set to maximum at the factory.) Paragraph 5-92 contains instructions for completely disabling the crowbar; if this is desired.

3-14 When adjusting the crowbar trip point, the possibility of false tripping must be considered. If the trip voltage is set too close to the supply's operating voltage, a transient in the output would falsely trip the crowbar. For this reason it is recommended that the crowbar be set higher than the output voltage by 7% of the output voltage plus one volt.

3-15 Connecting The Load

3-16 To satisfy the requirements of safety, the wires to the load should be at least heavy enough not to overheat while carrying the power supply current that would flow if the load were shorted. Generally heavier wire than this is required to obtain good regulation at the load. If the load regulation is critical, use remote voltage sensing. (Refer to paragraph 3-25.)

3-17 If multiple loads are connected to one supply, each load should be connected to the supply's output terminals using separate pairs of connecting wires. This minimizes mutual coupling effects between loads and takes full advantage of the supply's low output impedance. Each pair of connecting wires should be as short as possible and twisted or shielded to reduce noise pickup.

3-18 If load considerations require the use of output distribution terminals that are located remotely from the supply, then the power supply output terminals should be connected to the remote distribution terminals by a pair of twisted or shielded wires and each load should be separately connected to the remote distribution terminals. Remote voltage sensing would be required under these circumstances. (Refer to paragraph 3-25.)

3-19 Either positive or negative voltages can be obtained from this supply by grounding one of the output terminals or one end of the load. Always use two wires to connect the load to the supply regardless of where or how the system is grounded. Never ground the system at more than one point. This supply can be operated up to 300 volts above ground if neither output terminal is grounded.

3-20 Operation Beyond Rated Output

3-21 The supply may be able to provide voltages and currents greater than its rated maximum outputs. Operation can extend into the shaded areas on the meter faces without damage to the supply, but performance cannot be guaranteed to meet all specifications.

3-22 OPTIONAL OPERATING MODES

3-23 The optional operating modes discussed in the following paragraphs include:

a. Remote voltage sensing
b. Remote programming
c. Auto-Parallel operation
d. Auto-Series operation
e. Auto-Tracking operation

Special operating instructions for instruments equipped with Option 040 to permit their interfacing with a Model 6940B Multiprogrammer or a 6941B Multiprogrammer Extender are not included but can be found in the manual covering the programmable resistance cards that are necessary to complete the interface. Special calibration instructions for power supplies equipped with Option 040 are included in Section V of this manual.

3-24 By changing its rear panel strapping pattern according to the instructions which follow, any of the

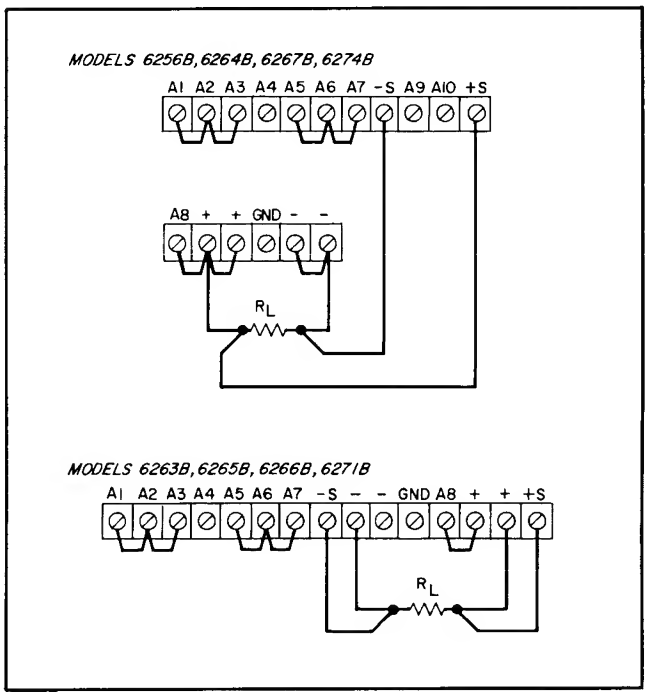

Figure 3-3. Remote Sensing

supplies covered by this manual can be operated in any of the modes listed above.

—— CAUTION ——

Disconnect input ac power before changing any rear panel connections and make certain all wires and straps are properly connected and terminal strip screws are securely tightened before reapplying power.

3-25 Remote Voltage Sensing

3-26 Because of the unavoidable voltage drop developed in the load leads, the normal strapping pattern shown in Figure 3-2 will not provide the best possible voltage regulation at the load. If, for example, one were to use 8-gauge wire to connect a load that is located only 5 feet from a Model 6256B 10V 20A supply, the regulation measured at the load would be about 120 millivolts as compared to the 1.2 millivolt regulation that could be measured at the supply's output terminals. Thus even relatively short load leads can cause a considerable degradation of the supply's performance. The remote sensing connections shown in Figure 3-3 improve the voltage regulation at the load by monitoring the voltage there instead of at the supply's output terminals. (The advantages of remote sensing apply only during constant voltage operation. This is because in the constant current mode the resistance of the load leads has no adverse effect on a supply's performance.)

3-27 As can be seen in Figure 3-3, remote sensing involves removing the (+S) and (−S) jumpers from the rear panel terminals, connecting the load leads normally, and using a separate pair of wires to connect the (+S) and (−S) sensing terminals to the load. The following paragraphs discuss some precautions that should be observed when making a remote sensing installation.

NOTE

The (+S) jumper is the one that links the (+S) terminal to the (+OUT) or (A10) terminal when the supply's terminals are strapped for normal operation as shown in Figure 3-2. The (−S) jumper is the one that links the (−S) terminal to the (−OUT) or (A9) terminal.

3-28 The load leads should be of the heaviest practicable wire gauge, <u>at least heavy enough to limit the voltage drop in each lead to one volt</u>. This limitation is dictated by the adverse effect that a greater load lead voltage drop has on bias voltages within the supply when remote sensing is used. Twisting the load leads may help to minimize noise pick-up. While there are practical limitations on the distance that separates a power supply from its load when using remote sensing, it isn't possible to define these limits precisely due to a variety of factors that are unique to each particular installation.

3-29 Since the sensing leads carry only a few milliamps, the wires used for sensing can be much lighter than the load leads (22 AWG is generally adequate), but they should be a shielded, twisted pair to minimize the pickup of external noise. Any noise picked up on the sensing leads will appear at the supply's output. The shield should be grounded at one end only and should not be used as one of the sensing conductors. The sensing leads should be connected as close to the load as possible.

3-30 The sensing leads are part of the supply's programming circuit, so they should be connected in such a way as to make it unlikely that they might inadvertently become open circuited. If the sensing leads were to open during operation, the output voltage would tend to rise. Although the increase would be limited by protective resistors R58 and R59, damage to the supply or to the load might occur if the loss of sensing were accompanied by a load transient. For this reason no switch, relay, or connector contacts should be included in the remote sensing path.

—— CAUTION ——

When using remote voltage sensing, it is possible to damage the supply by disconnecting a load lead while the sensing lead is still connected and the supply is energized. If a load lead becomes disconnected, current flows through internal protection resistors R58 and R59, the sensing leads, and the load and may burn out the resistors. Additional factors could compound the damage caused by an opened load lead. If the output of the supply is connected to an inductive load or a battery, or is connected in parallel with another supply, then opening a load lead would allow current from the external source to flow through the sensing leads and damage the supply's input circuits. If the crowbar fires, the damage could even be greater.*

For these reasons, if there is any risk of an opened load circuit while remote sensing is used, 1/16-amp fuses should be installed in both sensing leads. Fuses in the sensing leads will not affect the performance of the supply and should protect against costly damage.

**Remote sensing is not recommended when charging or discharging a battery. See paragraphs 3-79 and 3-83.*

3-31 Another factor to be considered when making a remote sensing installation is the inductance of the long load leads. Although dc and low frequency performance are improved by remote sensing, the higher inductance of longer leads does impair transient response and could affect the stability of the feedback loop seriously enough to cause oscillation. Disconnecting the supply's output capacitor and connecting a similar capacitor directly across the load helps to overcome these problems. Disconnect output capacitor C20 by removing the rear panel jumper from between terminals (+) and (A8) and connect another capacitor having approximately the same capacitance, an equal or greater voltage rating, and good high frequency characteristics across the load using short leads. It may also be beneficial to readjust transient recovery control R30 located on the main circuit board.

3-32 Remote Programming

3-33 The output voltage or current of these power supplies can be remotely controlled by connecting an external resistor or applying an external voltage to rear panel terminals. If resistance programming is used, a variable resistor can control the output over its entire range, or, by being connected in series with a fixed resistor, can have its control restricted to a limited portion of the output range. Alternately, a switch can be used to select fixed values of programming resistance to obtain a set of discrete voltages or currents. (The switch must have make-before-break contacts to avoid producing the output voltage transients that momentarily opening the programming terminals would cause.) To maintain the temperature and stability specifications of the supply, programming resistors must be stable, low noise resistors with a temperature coefficient of less than 30ppm per °C and a power rating at least 30 times what they will actually dissipate.

3-34 Both voltage and current outputs can also be controlled through a voltage input. When voltage programming the output voltage, the choice can be made between using a connection that produces a unity gain relationship between input and output or another connection that produces variable voltage gains. (Only the unity gain connection is included in this manual, but methods of voltage programming that provide gains greater or less than unity are discussed in Application Note 90A, which is described in paragraph 3-5.)

3-35 Connecting a supply for remote voltage or current programming disables the corresponding front panel controls.

3-36 The following paragraphs discuss in greater detail the methods of remotely programming the output voltage or current using either a resistance or a voltage input.

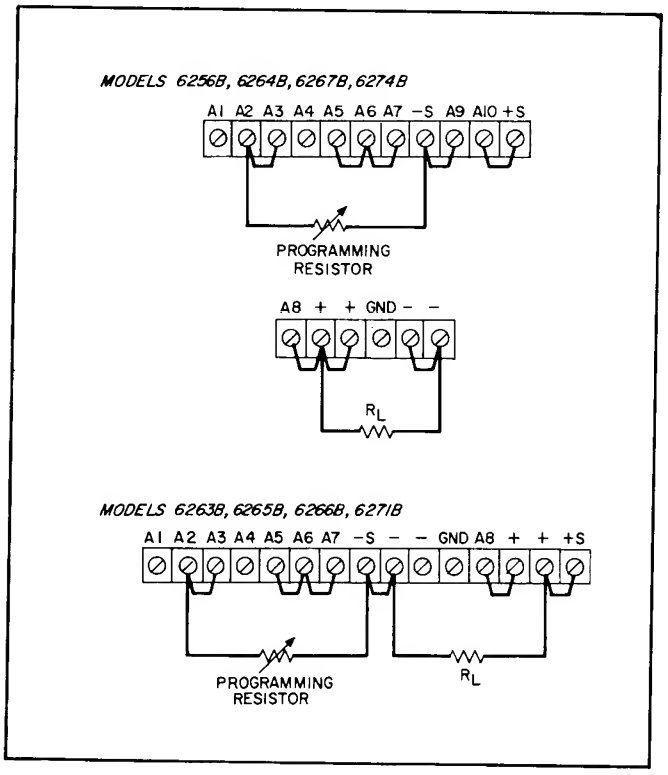

Figure 3-4. Resistance Programming of Output Voltage

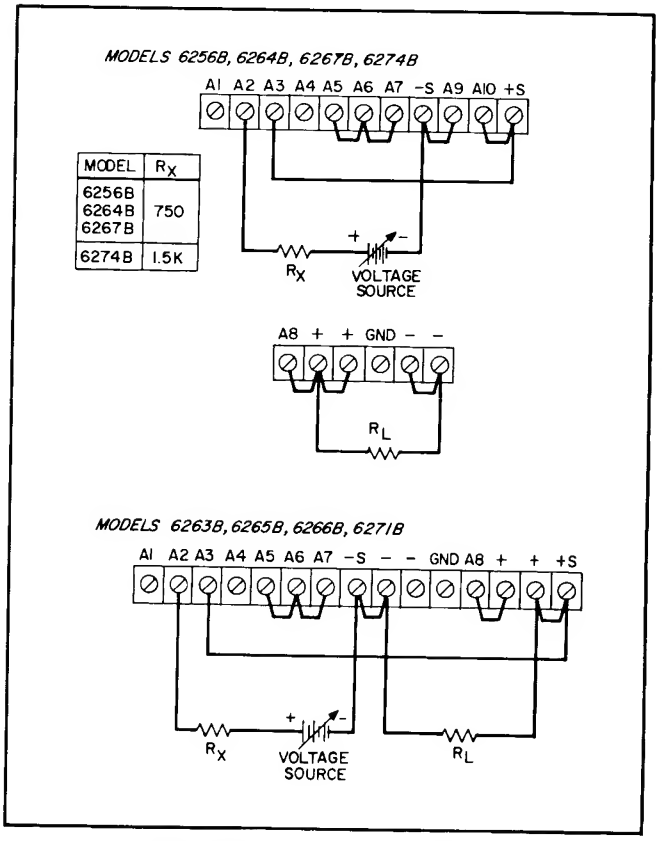

Figure 3-5. Voltage Programming of Output Voltage (Unity Gain)

Whichever method is used, the wires connecting the programming terminals of the supply to the remote programming device must be shielded to reduce noise pickup. The outer shield of the cable should not be used as a conductor but should be connected to ground at one end only.

3-37 **Constant Voltage Output, Resistance Input.** The rear panel connections shown in Figure 3-4 allow the output voltage to be varied by using an external resistor to program the supply. The supply's constant voltage programming current determines its programming coefficient. In the Models 6256B, 6263B, 6264B, 6265B, 6266B, and 6267B, this programming current is factory adjusted to within 1% of 5mA, resulting in a programming coefficient of 200 ohms per volt. In the Models 6271B and 6274B, a programming current of 3.33mA ±1% produces a programming coefficient of 300 ohms per volt. If a greater programming accuracy is required, it can be obtained either by changing resistor R13 as discussed in paragraph 5-74 or, if the instrument is equipped with Options 020 or 022, by adjusting potentiometer R122 as discussed in paragraph 5-75.

3-38 With the programming terminals shorted (terminals A2 to –S), the no-load output voltage of the supply should be –10mV ±5mV. If a minimum output voltage is required that is closer to zero than this, it can be obtained either by changing resistor R6 or R8 as discussed in paragraph 5-71 or, if the instrument is equipped with Option 020 or 022, by adjusting potentiometer R124 as discussed in paragraph 5-72.

——CAUTION——

Do not allow programming terminals (A2) and (–S) to become open circuited while resistance programming the output voltage. If they do become open circuited, the supply's output voltage tends to rise beyond its rated maximum. If the supply's current controls and overvoltage crowbar trip point are properly adjusted, however, no damage to the power supply or load should result.

3-39 **Constant Voltage Output, Voltage Input.** The rear panel connections shown in Figure 3-5 allow the output voltage to be varied by using an external voltage source to program the supply. In this mode, the output voltage varies in a 1 to 1 ratio with the programming voltage. The load on the programming voltage source is less than 20 microamperes. Impedance matching resistor R_X is required to maintain the temperature coefficient and stability specifications of the supply.

3-40 **Constant Current Output, Resistance Input.** The rear panel connections shown in Figure 3-6 allow the output current to be varied by using an external resistor to program the supply. The supply's constant current programming current, which is factory adjusted to 0.5mA ±10%, determine the exact value of its programming coefficient. The programming coefficients for the supplies included in this manual are as follows:

Models	6256B, 6264B	10 ohms/ampere
	6263B, 6267B	100 ohms/ampere
	6265B, 6271B	300 ohms/ampere
	6266B	200 ohms/ampere
	6274B	67 ohms/ampere

If the ±10% accuracy of these coefficients is not adequate, they may be adjusted either by changing resistor R19 as discussed in paragraph 5-80 or, if the instrument is equipped with Option 021 or 022, by adjusting potentiometer R126 as discussed in paragraph 5-81.

3-41 With zero ohms placed across the programming terminals, the output current of the supply may be set to exactly zero either by changing resistors R25 and R28 as described in paragraph 5-78 or, if the insturment is equipped with Option 021 or 022, by adjusting potentiometer R128 as discussed in paragraph 5-79.

——CAUTION——

Do not allow programming terminals (A4) and (A6) to become open-circuited while resistance programming the output current. If they do open, the supply's output current rises to a value thay may damage the supply or the load. If in the particular programming configuration used there is a chance that the terminals might open, we suggest that a resistor of the following value be connected across the programming terminals:

Models	*6256B, 6264B*	*200 ohms*
	6263B, 6266B	*1000 ohms*
	6267B, 6274B	*1000 ohms*
	6265B, 6271B	*900 ohms*

Of course, when this resistor is used, the resistance value actually programming the supply is the parallel combination of the remote programming resistance and the resistor across the programming terminals. Like the programming resistor, this resistor should be a low noise, low temperature coefficient type.

3-42 **Constant Current Output, Voltage Input.** The rear panel connections shown in Figure 3-7 allow the output current to be varied by using an external voltage source to program the supply. The constant current programming

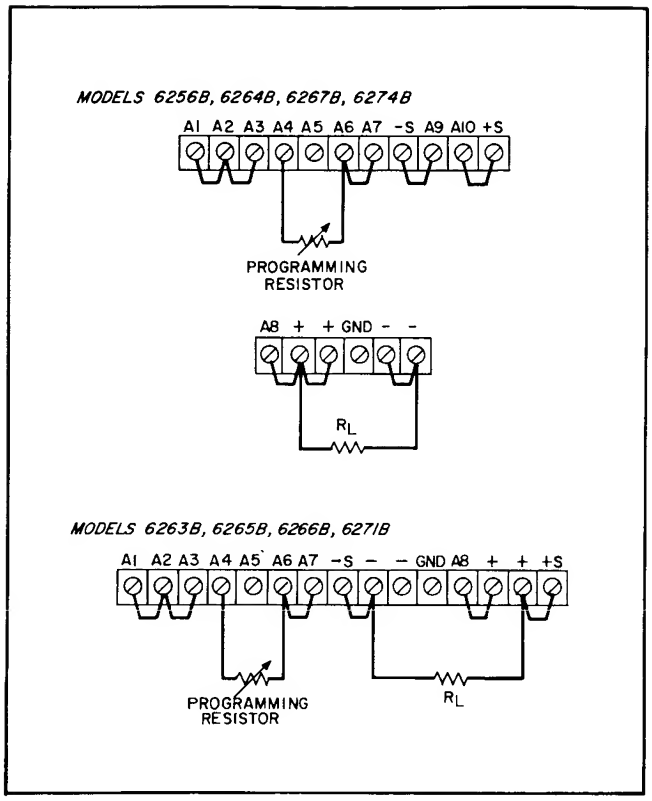

Figure 3-6. Resistance Programming of Output Current

coefficients for the supplies included in this manual are as follows (±10%):

Models	6256B, 6264B	25mV/ampere
	6263B, 6267B	50mV/ampere
	6265B, 6271B	167mV/ampere
	6266B	100mV/ampere
	6274B	33.3mV/ampere

The load on the programming voltage source is less than 20 microamperes. The programming voltage required to obtain maximum rated current from these supplies is about 500 millivolts. An input greater than 600mV may damage the instrument through excessive power dissipation. Impedance matching resistor R_X is required to maintain the temperature coefficient and stability specifications of the supply.

3-43 Auto-Parallel Operation

3-44 Use the rear panel and circuit board interconnections shown in Figure 3-8 or 3-9 to auto-parallel two or three supplies. This mode of operation provides a greater current capacity than can be obtained from a single supply while maintaining nearly equal load sharing among the paralleled supplies under all load conditions.
Supplies having the same model number make the most practical auto-parallel combinations, but any of the supplies included in this manual that have equal current ratings may be used.

NOTE

Use wires of equal length and gauge to connect each auto-paralleled supply to the load. Load sharing accuracy is affected unless the positive leads connecting each supply to the load are all equal in resistance.

3-45 Setting the Voltage and Current Controls. The auto-parallel combination of two or three supplies behaves as if it were a single constant-voltage/constant-current supply controlled by the voltage and current controls of the master supply. The voltage controls of the slave(s) are disabled, but their current controls remain operative and must be set to maximum to prevent a slave supply from independently reverting to constant current operation as would occur if the output current setting of the master supply exceeded that of a slave.

3-46 Overvoltage Protection in Auto-Parallel. The interconnections shown in Figures 3-8 and 3-9 between transformer T4 in the master and T4 in the slave(s) must be made to permit the overvoltage crowbar in the master to fire the SCRs in the master and the slave(s) if an overvoltage condition occurs. The circuit board pads to be interconnected are marked "EXT TRIG" and their locations are indicated on the component location diagrams

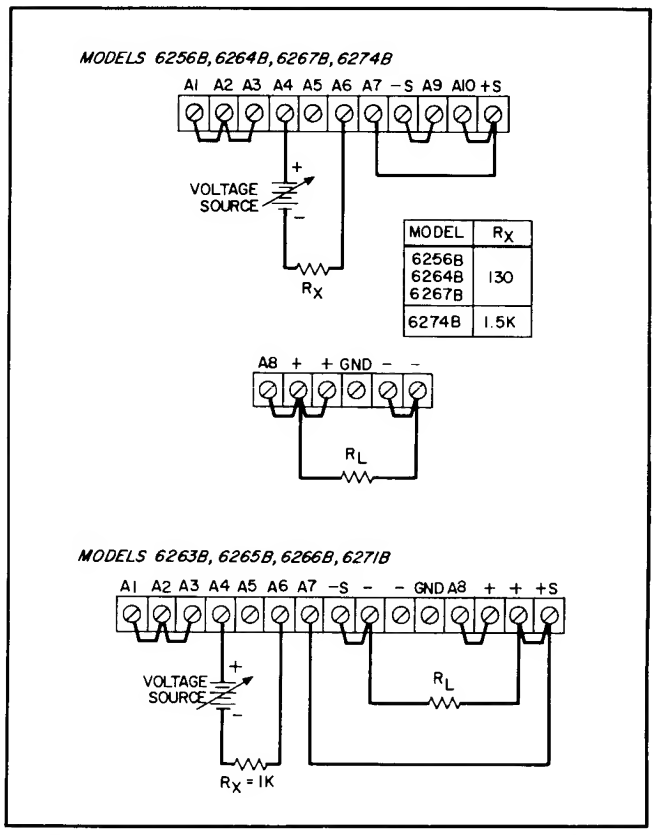

Figure 3-7. Voltage Programming of Output Current

in Section VII. Be sure to connect them with correct polarity, terminal 5 to 5 and 6 to 6. Set the slave supply overvoltage potentiometer(s) to maximum (clockwise) to disable them, and adjust the overvoltage trip point at the master supply.

3-47 **Auto-Parallel With Remote Sensing.** To combine auto-parallel operation with remote sensing, connect the supplies as described above but remove the (+S) and (−S) jumpers from the master supply and connect the (+S) and (−S) terminals directly to the (+) and (−) ends of the load. Observe the precautions outlined under paragraph 3-25.

3-48 **Auto-Parallel With Remote Programming.** When two or three supplies are connected in auto-parallel, their combined output voltage, current, or both can also be remotely programmed. Refer to the appropriate sections of paragraph 3-32 for the additional rear panel connections required and make these connections to the master supply only. Observe all precautions outlined in the paragraphs on remote programming. The simultaneous use of remote sensing and remote programming is also possible during auto-parallel operation.

3-49 Auto-Series Operation

3-50 Figures 3-10 and 3-11 show the rear panel and circuit board interconnections required to operate two or three supplies in the auto-series mode. This mode of operation allows two or three series-connected supplies to be simultaneously programmed by the voltage and current controls of a master supply. The master supply must always be the one at the positive end of the series combination. The output voltage of each slave supply varies in direct proportion to that of the master and the ratio of each slave's output voltage to the master's is established by the settings of the slave supplies' voltage controls. The resulting combination of two or three supplies behaves as if it were a single constant-voltage/constant-current supply. The supply with the lowest current rating limits the maximum output current of the combination. Any of the supplies included in this manual can be used as an auto-series slave, and any well-regulated variable output supply can be used as the master.

3-51 In applications where coordinated positive and negative voltages are required, grounding the center tap of an auto-series combination of supplies allows simultaneous proportional control of both supply voltages.

3-52 **Determining the Value for R_X.** Each slave supply has an external resistor R_X associated with it that supplies its voltage programming current. If the temperature coefficient and stability specifications of the supplies are to be maintained, these must be stable, low noise resistors with a temperature coefficient of less than 30ppm per °C and a power rating at least 30 times what they will actually dissipate. The proper value for R_X (when using two units in auto-series) or for R_{X1} (for the first slave when using three units) is calculated by first finding the voltage programming current of the slave supply. This is calculated by referring to Table 1-1 for the remote voltage programming resistance control coefficient and taking its reciprocal. For example, the voltage programming current in the Model 6256B is 1/ (200Ω/V) or 5mA. Next, divide this current into the maximum voltage rating of the master supply to determine R_X for the first slave. If our master supply were a zero-to-25-volt unit, for example, R_X or R_{X1} would be 25V/5mA = 5000 ohms.

3-53 When operating three supplies in auto-series, find R_{X2} by dividing the voltage programming current of the second slave, calculated as in paragraph 3-52, into the maximum voltage expected from the first slave.

3-54 **Setting the Voltage Controls.** The voltage each slave supply contributes is determined by its voltage control setting. The output voltage of the first slave supply tracks the voltage of the master, and the voltage of the second

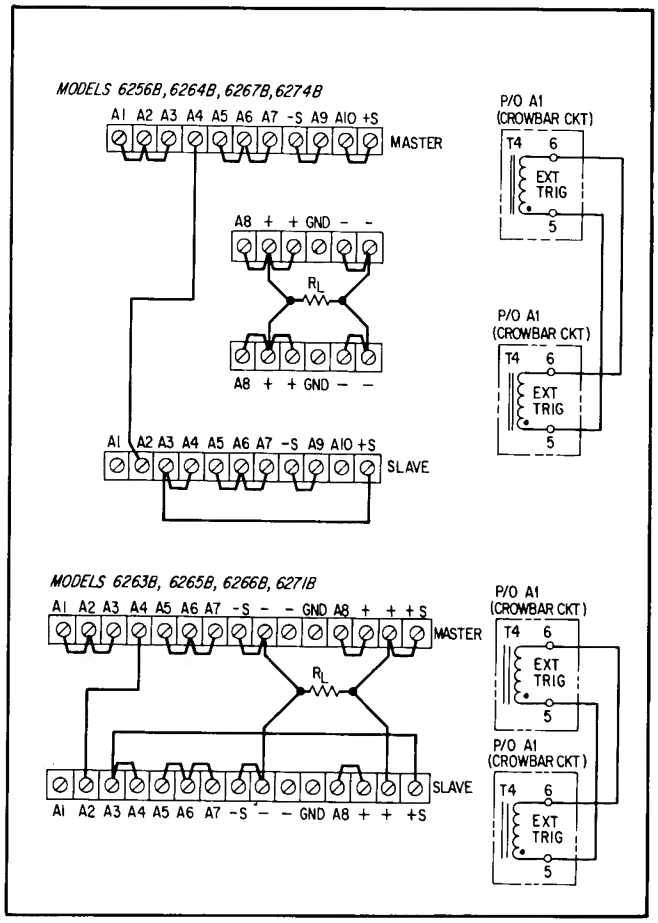

Figure 3-8. Auto-Parallel Operation of Two Units

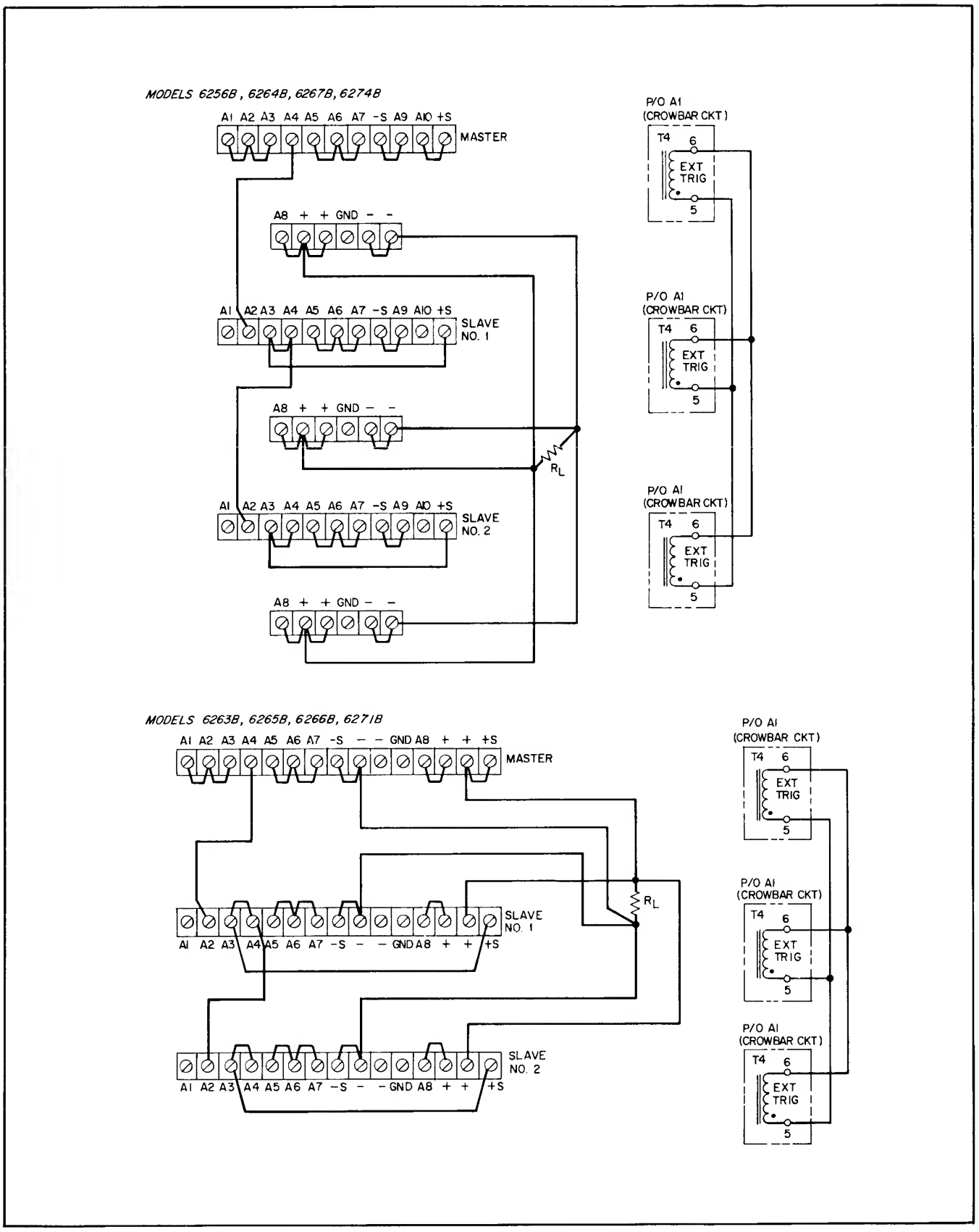

Figure 3-9. Auto-Parallel Operation of Three Units

slave (if used) tracks the voltage of the first slave. For this reason, the voltage of the master must be adjusted to maximum, and then each slave, in turn, must be set to the corresponding voltage desired during initial setup of the auto-series combination. Once this has been done, the total voltage of the combination can be controlled by the voltage controls of the master supply or it can be remotely programmed through the master supply.

3-55 Setting the Current Controls. Auto-series operation leaves the current controls of all supplies operative, but the supply whose current control has the lowest setting determines the point at which automatic crossover to constant current operation begins to lower its output voltage and thus that of the series combination. The constant current circuit of a supply has no effect on the outputs of the supplies connected in a more positive position in the series combination, but it does affect its own output and the outputs of the supplies connected in a more negative position. If the current controls of one of the slave supplies are set the lowest, then an overload or short circuit at the output will cause the master supply (or the master and the first slave) to force current through the reverse voltage protection diodes at the outputs of the downstream slaves. Because this current could be excessive either for the diodes or the load, the current controls of the slave supplies should be set to maximum and the master supply's current controls used to establish the output current or current limit.

3-56 Overvoltage Protection in Auto-Series. The interconnections shown in Figures 3-10 and 3-11 between transformer T4 in the master and T4 in the slave(s) must be made to permit the overvoltage crowbar in any one of the interconnected supplies to fire the SCRs in all of them if an overvoltage condition occurs. The circuit board pads to be interconnected are marked "EXT TRIG" and their locations are indicated on the component location diagrams in Section VII. Be sure to connect them with correct polarity, terminal 5 to 5 and 6 to 6. Set the overvoltage potentiometer in each supply so that it trips at a point slightly above the voltage that supply will contribute.

3-57 Auto-Series With Remote Sensing. To combine auto-series operation with remote sensing, connect the supplies as described above but remove the (+S) jumper from the master supply and the (−S) jumper from the last slave supply and connect the (+S) and (−S) terminals directly to the (+) and (−) ends of the load. Observe the precautions outlined under paragraph 3-25.

3-58 Auto-Series With Remote Programming. When two or three supplies are connected in auto-series, their combined output voltage, current, or both can also be remotely programmed. Refer to the appropriate sections of paragraph 3-32 for the additional rear panel connections required and make these connections to the master supply only. Observe all precautions outlined in the paragraphs on remote programming. The simultaneous use of remote sensing and remote programming is also possible during auto-series operation.

3-59 Auto-Tracking Operation

3-60 Figures 3-12 and 3-13 show the rear panel interconnections required to operate two or three supplies in the auto-tracking mode. This mode of operation allows two or three supplies that share a common negative output bus to power separate loads and have their outputs simultaneously programmed by the voltage and current controls of a master supply. Unless their outputs are to be equal, the supply that is to have the greatest output voltage must be selected as the master. The output voltage of each slave supply remains a constant percentage of the master's with the percentage for each slave established by that slave's voltage control settings and the choice of its

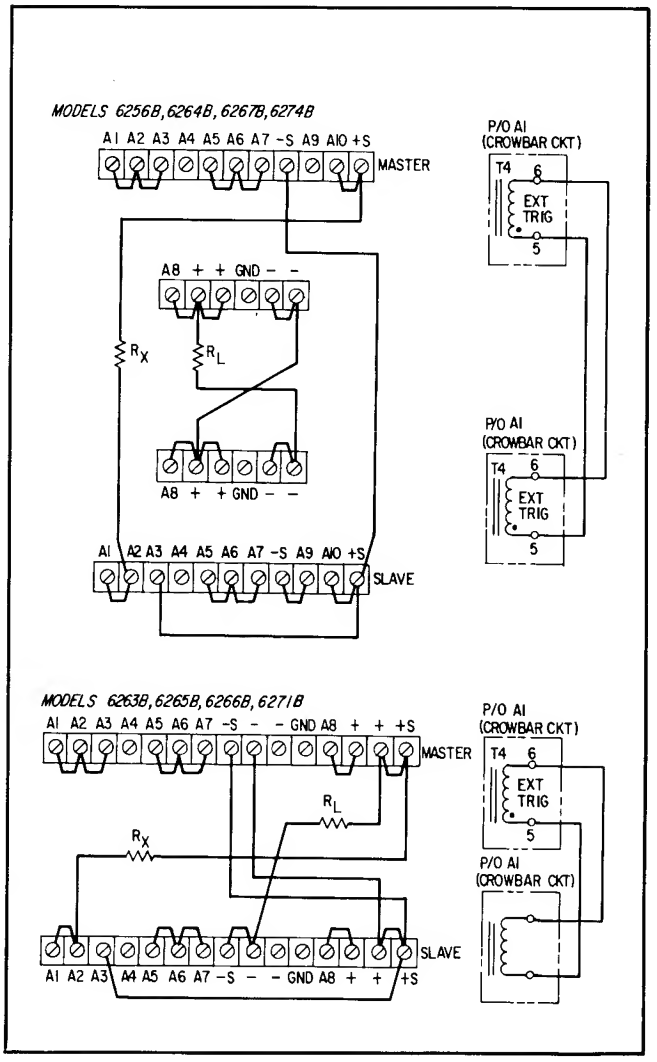

Figure 3-10. Auto-Series Operation of Two Units

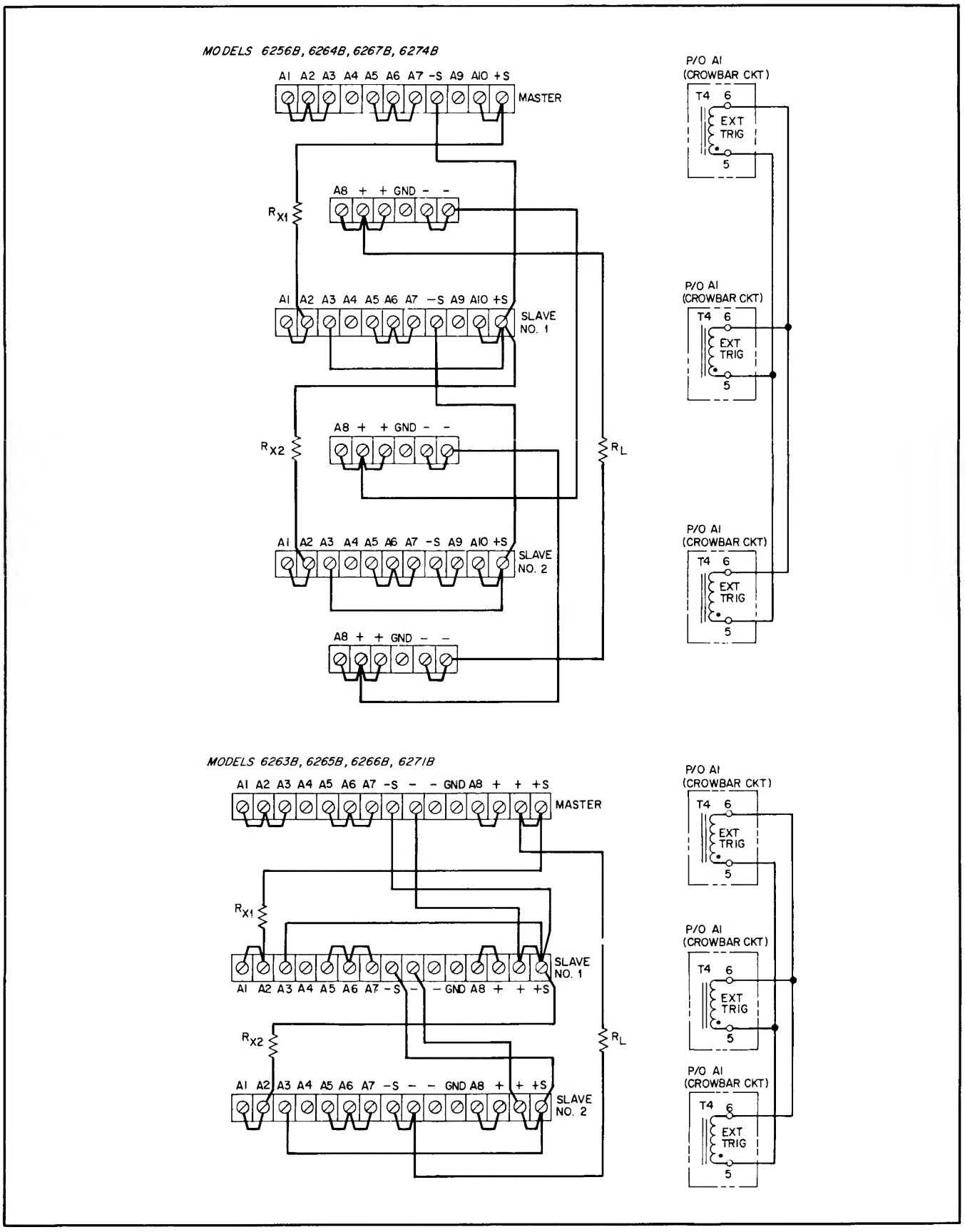

Figure 3-11. Auto-Series Operation of Three Units

external programming resistor R_X. Any of the supplies included in this manual can be used as an auto-tracking slave, and any well-regulated variable output supply can be used as the master.

3-61 Determining the Value for R_X. Each slave supply has an external resistor R_X associated with it that supplies its voltage programming current. If the temperature coefficient and stability specifications of the supplies are to be maintained, these must be stable, low noise resistors with a temperature coefficient of less than 30ppm per °C and a power rating at least 30 times what they will actually dissipate. To calculate the proper value for R_X for each slave, the following information is required:

a. E_M, the rated maximum voltage of the master supply

b. E_S, the corresponding maximum voltage desired of the slave supply with its voltage control set to maximum.

c. R_P, the resistance of the slave supply's coarse voltage control.

The R_P values for the supplies included in this manual are as follows:

Model	6256B	2.5kΩ
	6263B, 6264B	5kΩ
	6265B, 6266B, 6267B	10kΩ
	6271B, 6274B	20kΩ

To find R_X use the formula:

$$R_X = (E_M R_P/E_S) - R_P$$

For example, if the slave supply is a Model 6263B and we want its output to vary from zero to 10 volts as the master supply varies from zero to 40 volts, the solution for R_X is:

$$R_X = (40V \times 5k\Omega/10V) - 5k\Omega$$
$$R_X = 15k\Omega$$

3-62 It is also possible to make an auto-tracking slave's voltage equal the output of the master supply. To do this, make a direct connection from the (+S) terminal of the master to the (A2) terminal of the slave instead of using a programming resistor, and remove the slave's (A1) to (A2) jumper.

3-63 Setting the Voltage and Current Controls. The voltage control of each slave must be set fully clockwise to obtain the voltage ratios established by the formula for R_X given in paragraph 3-61. By lowering the settings of the slave's voltage controls, the voltage of the slave can be made a smaller percentage of the master supply's voltage. The current controls of all supplies in an auto-tracking combination are independently operative and can be used to set current limits for each individual load. If the master supply goes into constant current mode, the output voltages of the slaves continue to track that of the master. If a slave supply goes into constant current mode, however, no other supply is affected.

3-64 Overvoltage Protection in Auto-Tracking. Paralleling the crowbar circuits, as is required for the auto-parallel and auto-series modes, is optional in the auto-tracking mode. If the external trigger windings of transformer T4 in the master and in the slave supplies are not paralleled, the overvoltage protection circuit in each supply independently monitors the voltage across its own load. Then if the master supply crowbars, the output voltage of the slave(s) also decreases, but if one of the slaves crowbars, no other supply is affected.

3-65 In order to have all supplies in an auto-tracking combination crowbar simultaneously if any of them has an overvoltage condition, parallel their crowbar circuits as shown in Figure 3-10 or 3-11 and described in paragraph 3-56.

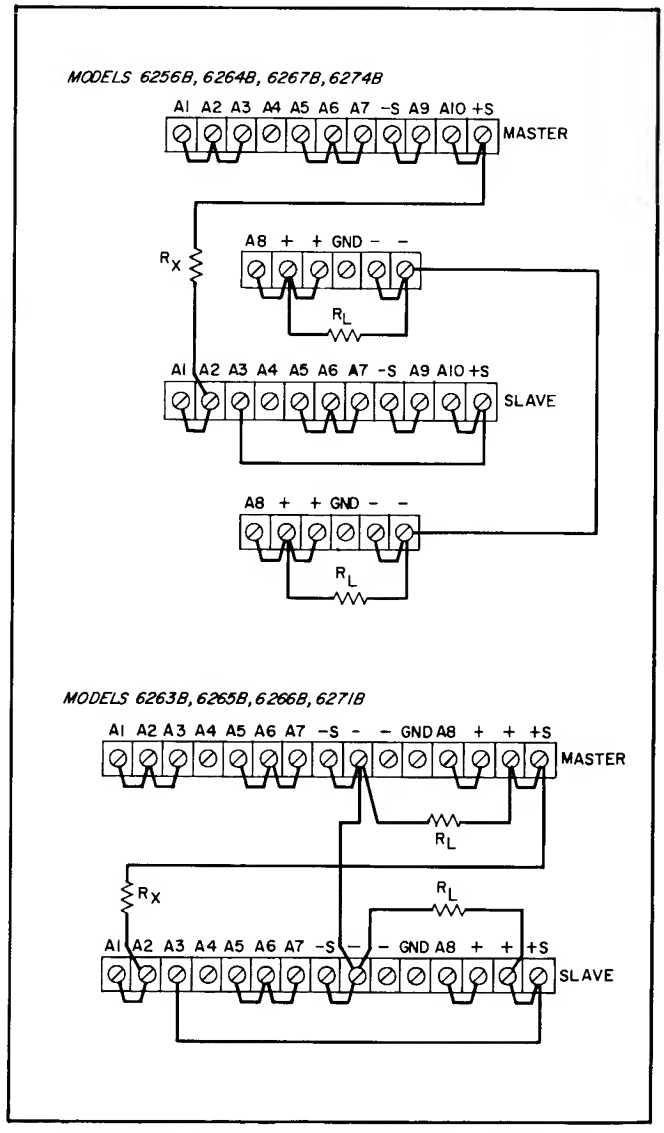

Figure 3-12. Auto-Tracking Operation of Two Units

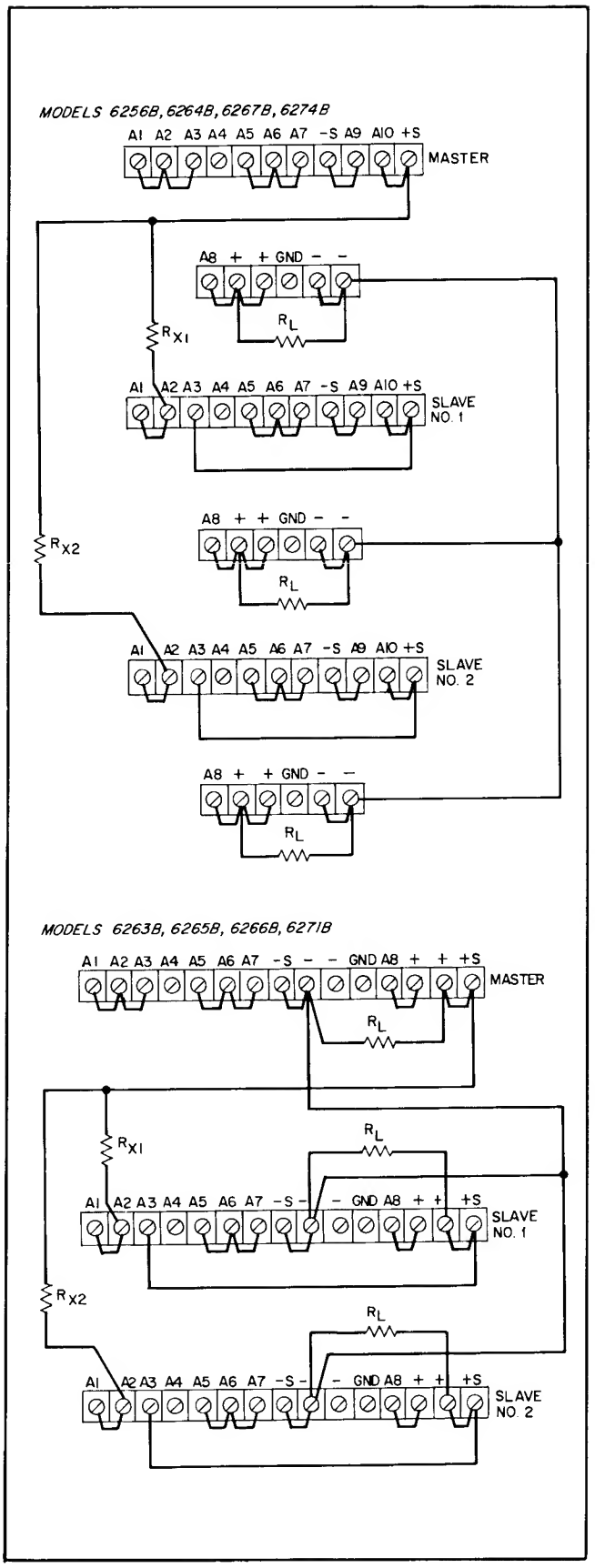

Figure 3-13. Auto-Tracking Operation of Three Units

3-66 **Auto-Tracking With Remote Sensing.** To combine auto-tracking operation with remote sensing, connect the supplies as described above but remove the (+S) and (–S) jumpers from each supply and connect the (+S) and (–S) terminals directly to the (+) and (–) ends of its load. Observe the precautions outlined under paragraph 3-25.

3-67 **Auto-Tracking With Remote Programming.** When two or three supplies are connected for auto-tracking operation, their output voltages can be remotely programmed but their currents cannot. Refer to the appropriate sections of paragraph 3-32 for the additional rear panel connections required and make these connections to the master supply only. Observe all precautions outlined in the paragraphs on remote programming. The simultaneous use of remote sensing and remote programming is also possible during auto-tracking operation.

3-68 SPECIAL OPERATING CONSIDERATIONS

3-69 Pulse Loading

3-70 The power supply automatically crosses over from constant-voltage to constant-current operation, or the reverse, in response to an increase beyond the preset voltage or current limit. Although the preset limit may be set higher than the average output current or voltage, high peak currents or voltages may exceed the preset limit and cause crossover to occur. If this current or voltage limiting is not desired, set the current or voltage controls somewhat above the peak rather than the average requirement.

3-71 Output Capacitance

3-72 An internal capacitor (C20) connected across the output terminals of the supply helps to supply high-current pulses of short duration during constant voltage operation. In applications where the availability of high peak output currents should be reduced, this capacitor can be removed from the circuit by removing the strap connected between rear panel terminals (A8) and (+).

NOTE

The removal of C20 from the circuit may permit the supply to oscillate. If the supply appears unstable, it may be beneficial to readjust transient recovery control R30 located on the main circuit board.

3-73 It may also be desirable to remove C20 from the circuit when the supply is being used in the constant-current mode for the following reasons:

a. With C20 connected, the output impedance of the supply decreases with increasing frequency.

b. With C20 connected, the output current takes longer to recover from the effects of a change in the load resistance.

c. With C20 connected, a rapid reduction in load resistance can produce a large surge current that could cause a high power dissipation in the load.

3-74 Reverse Voltage Protection

3-75 An internal diode (CR34) connected with reverse polarity across the output terminals of the supply protects the output electrolytic capacitors and series transistors from the effects of a reverse voltage applied across the supply's output. Such a reverse voltage might inadvertently be applied when operating supplies in series if one of them were to be turned on or off before the other. The current rating of CR34 is equal to the rated output current of the supply.

3-76 The series regulator transistors are also protected against reverse voltage by diode CR11. This diode shunts the series regulators if the supply is connected in parallel with another supply but is deenergized.

3-77 Reverse Current Loading

3-78 An active load connected to the power supply may actually deliver a reverse current to the supply during a portion of its operating cycle. If an external source is allowed to pump current into the supply, it will cause a loss of regulation and might possibly damage the output capacitor. To avoid these effects, it is necessary to preload the supply with a dummy load resistor so that it delivers current through the entire operating cycle of the load device.

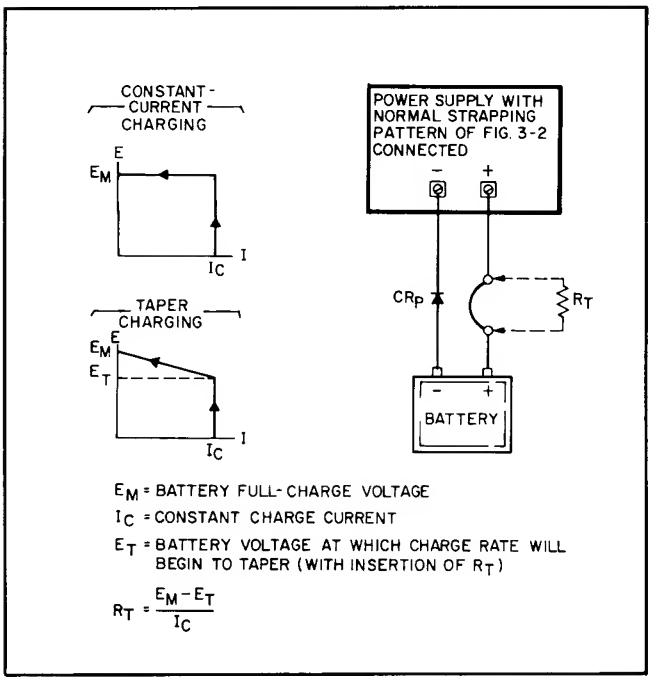

Figure 3-14. Battery Charging

3-79 Battery Charging

3-80 The automatic crossover between constant-voltage and constant-current exhibited by these supplies makes them ideal for battery charging applications. Using this feature, a battery may be charged at a constant-current until the maximum charge voltage is reached, at which point the supply reverts to constant-voltage operation and continues to supply a trickle charge current sufficient to maintain full charge. Thus, the charging operation can be unattended after properly setting the charging rate and maximum charge voltage and connecting the battery to the output terminals of the supply.

CAUTION

Any time these supplies are used to charge a battery, be sure to install a protective diode CR_P in series with the battery as shown in in Figure 3-14 to prevent the battery from discharging into the supply if the supply is turned off. Extensive damage to the supply could result if this diode were omitted.

The use of remote voltage sensing provides no advantages when performing a constant-current battery charge as discussed in paragraph 3-81 or a taper charge as discussed in paragraph 3-82. Because of a serious risk of damage to the supply, the use of remote voltage sensing should not be attempted when charging (or discharging) a battery. Also see the CAUTION following paragraph 3-30.

NOTE

A large battery, connected as a load, presents a large capacitance to the output terminals. This capacitance could cause the supply to oscillate. If the supply appears unstable, it may be beneficial to readjust transient recovery control R30 located on the main circuit board.

3-81 Constant-Current Charge. To perform a constant-current battery charge, set the charging rate and full charge voltage as follows:

a. Turn both the VOLTAGE and CURRENT controls fully counterclockwise (CCW).

b. Connect a short circuit across the output terminals and rotate the VOLTAGE control fully clockwise (CW).

c. Adjust the CURRENT control for the desired charging rate as read on the front panel ammeter.

d. Rotate VOLTAGE control fully CCW and remove the short circuit.

e. Adjust the VOLTAGE control for an output voltage 0.7 volts greater than the desired full charge voltage. (The added 0.7 volts compensates for the drop actoss CR_P.) The supply may then be connected to the battery terminals, positive to positive and negative to negative as shown in Figure 3-14 (omit R_T).

3-82 **Taper Charge.** When charging lead-acid cells, many manufacturers recommend that the charging current be reduced as the charge nears completion. This can be accomplished by inserting a small resistance (R_T) in series with one of the load leads from the supply to the battery. (See Figure 3-14.) This resistor alters the normally rectangular charging plot in such a manner as to provide a taper charge for the last portion of the charge. The proper value for this resistor is the difference between the full charge voltage and the voltage at which the tapering is to start, divided by the initial charging current. Set the initial charging rate and full charge voltage as instructed in paragraph 3-81.

3-83 Battery Discharging

3-84 These power supplies are also useful when batteries must be discharged at a constant current in order to test them. Connecting a supply as shown in Figure 3-15 and following the instructions below makes an unattended constant-current discharge possible by automatically shutting off the output of the supply when the battery voltage reaches zero.

3-85 The supply operates in the constant-current mode, delivering the current set by the current control. This constant current flowing through dropping resistor R_X produces a constant voltage across the resistor. Initially, the battery voltage is high and the supply's output voltage is low, but as the battery voltage decreases during discharge, the supply voltage increases. When the battery voltage reaches zero, the supply senses this through the connection to its (A2) terminal and reduces the output current to zero. As shown in Figure 3-15, R_X must be selected so that its IR drop is less than the maximum rated output voltage of the supply, but greater than the initial battery voltage.

3-86 To give a battery a constant-current discharge, proceed as follows:

a. Turn off the power supply and disconnect the jumpers from terminal (A1) to (A2) and from (A2) to (A3). (This step disables the supply's VOLTAGE controls.)

b. Connect terminal (A3) to (+S) and leave all other jumpers connected as for normal operation as shown in Figure 3-15.

c. Connect the negative terminal of the battery to (A2) through a 10kΩ resistor.

d. Connect the negative terminal of the supply to the positive terminal of the battery.

e. Connect R_X between the positive terminal of the supply and the negative terminal of the battery, rotate the supply's current control fully counterclockwise (CCW), energize the supply, and set the current control for the desired discharge current as indicated on the front panel meter.

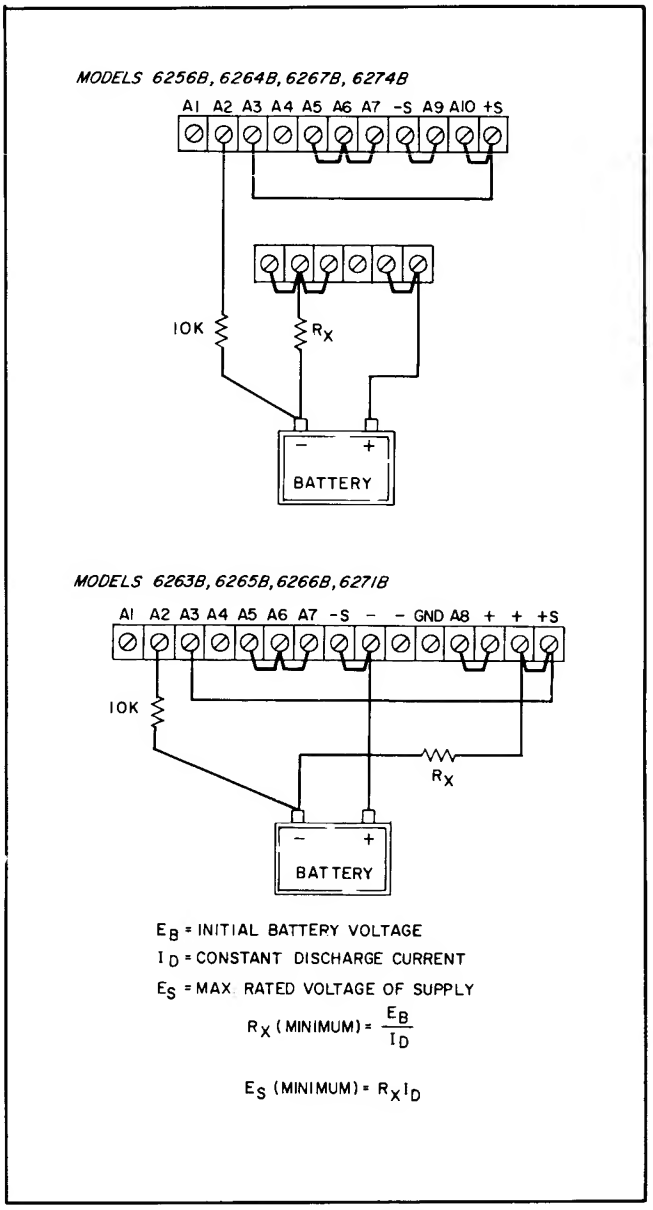

Figure 3-15. Battery Discharging

SECTION IV
PRINCIPLES OF OPERATION

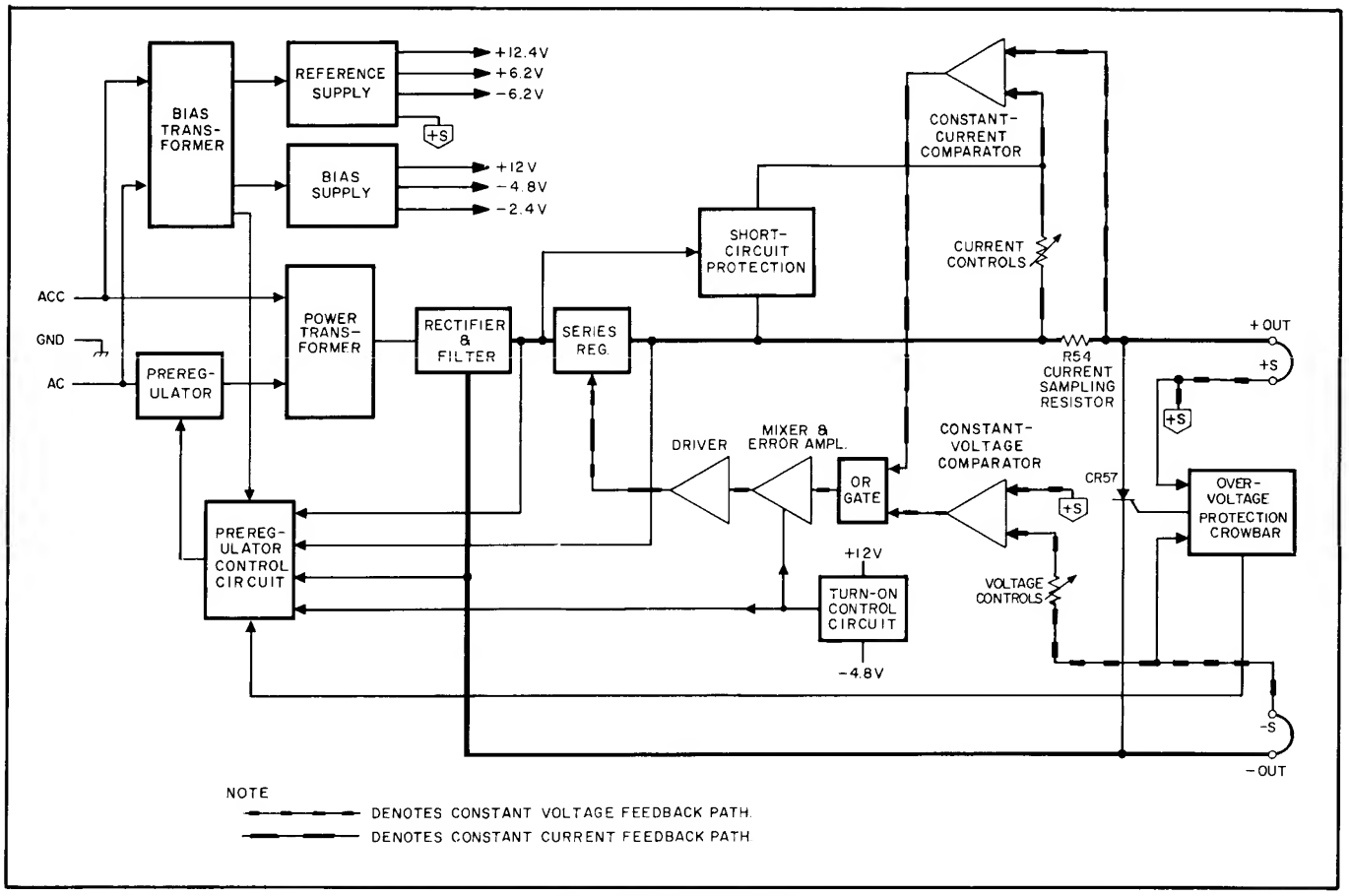

Figure 4-1. Overall Block Diagram

4-1 OVERALL BLOCK DIAGRAM DISCUSSION

4-2 The major circuits of the power supply are shown on the overall block diagram of Figure 4-1. The ac input to the power transformer is preregulated by a triac, which forms a feedback loop in conjunction with the preregulator control circuit. This feedback loop maintains a low and constant voltage drop across the series regulator in order to minimize dissipation in the series regulator transistors.

4-3 To accomplish this, the preregulator control circuit issues a phase-adjusted firing pulse to the triac once during each half cycle of the ac input. The control circuit continuously samples the input line voltage, the dc input to the series regulator, and the voltage across the series regulator. On the basis of these inputs it controls the time at which each firing pulse is generated.

4-4 The output of the triac preregulator is stepped down by the power transformer, full-wave rectified, and filtered. The resulting preregulated dc voltage is applied to the series regulator, which varies its conduction to provide a regulated voltage or current at the output terminals.

4-5 The series regulator is part of another feedback loop which consists of the error and driver amplifiers, the constant-voltage comparator, and the constant-current comparator. The series regulator feedback loop makes rapid, low magnitude adjustments to the output while the preregulator feedback loop handles large, relatively slow regulation demands.

4-6 The feedback signals that control the conduction of the series regulator originate in the constant-voltage or constant-current comparator. During constant-voltage operation the constant-voltage comparator compares the

output voltage of the supply with the drop across the VOLTAGE controls. If these voltages are not equal, the comparator produces an error signal that is amplified and fed back to the series regulator with the correct phase and amplitude to make them equal. In this manner, the constant-voltage comparator holds the output voltage at the level established by the VOLTAGE controls.

4-7 During constant-current operation, the constant-current comparator detects any difference between the voltage drop developed by load current flowing through the current sampling resistor and the voltage across the CURRENT controls. If the two inputs to the comparator are momentarily unequal, an error signal is generated that alters the conduction of the series regulator by the amount necessary to reduce the error voltage at the comparator's input to zero. Hence, the IR drop across the current sampling resistor, and therefore the output current, is held at a constant value.

4-8 Since the constant-voltage comparator causes the output impedance to be low and allows the output current to change whenever the load resistance changes, while the constant-current comparator causes the output impedance to be high and allows the output voltage to change in response to a load resistance change, it is obvious that the two comparison amplifiers cannot control the output simultaneously. For any given value of load resistance, the power supply must act either as a constant-voltage source or as a constant-current source. The outputs of both comparators are connected through an OR gate. This enables one comparator or the other to take control.

4-9 Figure 4-2 shows the output characteristic of a constant-voltage/constant-current power supply. With no load connected, the output current (I_{OUT}) is zero and the output voltage (E_{OUT}) equals the front panel voltage control setting (E_S). When a load resistance is connected to the output terminals of the supply, the output current increases while the output voltage remains constant. Point D thus represents a typical constant-voltage operating point. Further decreases in load resistance are accompanied by further increases in I_{OUT} with no change in the output voltage until the output current reaches I_S, a value equal to the front panel current control setting. At this point the supply automatically changes its mode of operation and becomes a constant-current source. Still further decreases in the value of load resistance are accompanied by a drop in the supply's output voltage with no accompanying change in its output current. With a short circuit across the load terminals, $I_{OUT} = I_S$ and $E_{OUT} = 0$.

4-10 The "crossover" value of load resistance can be defined as $R_C = E_S/I_S$. Adjustment of the front panel voltage and current controls permits this "crossover" resistance R_C to be set to any desired value from 0 to ∞. If R_L is greater than R_C, the supply is in constant-voltage operation; if R_L is less than R_C, the supply is in constant-current operation.

4-11 The short-circuit protection circuit (see Figure 4-1) protects the series regulator in the event the output is shorted while the controls are set to a high output voltage and current. The protection circuit monitors the voltage drop across the series regulator. If this voltage rises above a preset level, the protection circuit limits the current through the series regulator until the preregulator can reduce the voltage across the series regulator. Once this voltage returns to normal, the short-circuit protection circuit is turned off and has no effect on operation of the supply.

4-12 The overvoltage protection crowbar monitors the output of the supply and, if it exceeds a preset threshold, fires an SCR which short circuits the supply. The crowbar also sends a turn-down signal to the preregulator control circuit.

4-13 The turn-on control circuit is a long-time-constant network that gives the supply a gradual turn-on characteristic. The slow turn-on feature protects the preregulator triac and the series regulator from damage that might occur when ac power is first applied to the unit. At turn-on, the control circuit sends inhibiting voltages to the preregulator control and the series regulator (via the error and driver amplifiers). After a brief delay, the inhibiting voltages are removed and the circuit has no further control over the operation of the supply.

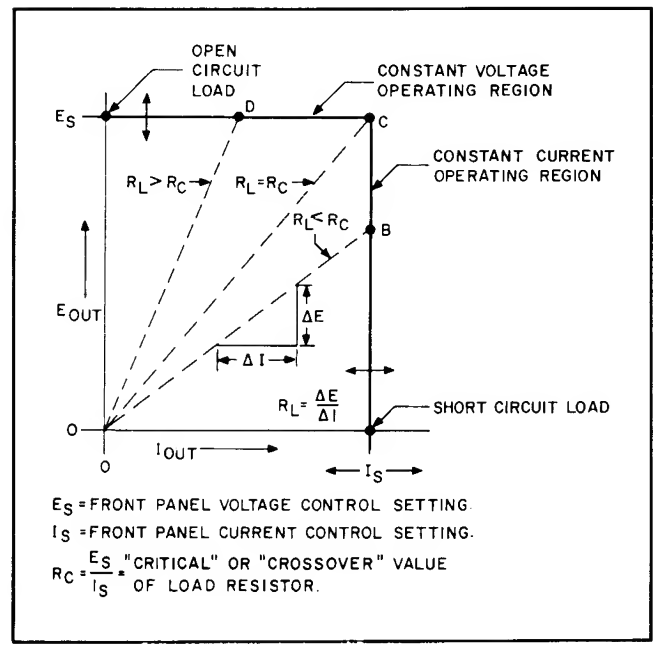

Figure 4-2. Operating Locus of a CV/CC Power Supply

4-14 The reference supply provides stable reference voltages used by the constant-voltage and current-comparators. Less critical operating voltages are obtained from an unregulated bias supply.

4-15 DETAILED CIRCUIT ANALYSIS (See Figure 7-4 or 7-7)

4-16 Preregulator Control Circuit

4-17 The preregulator minimizes the power dissipated by the series regulating transistors during input line voltage or dc output voltage variations. Preregulation is accomplished by a phase control circuit using triac A2CR1 as the switching element.

4-18 The triac is a bi-directional device; that is, it can conduct current in either direction. Hence, the device fires whenever it receives a gating pulse regardless of the polarity of the ac voltage applied to it. The triac is fired once during each half-cycle of the ac input (see Figure 4-3). Notice that when the triac is fired early in the half-cycle, the ac level applied to the power transformer is relatively high. When the triac is fired later in the half-cycle, the ac level is relatively low.

4-19 Normally the ac input must be above a certain minimum potential before a triac will conduct. However, A2C1 and A2R1 provide a holding current that allows the triac to conduct at any time during the ac input cycle. RFI choke A2L1A/A2L1B slows down the turn-on of the triac in order to minimize spikes at the output of the supply.

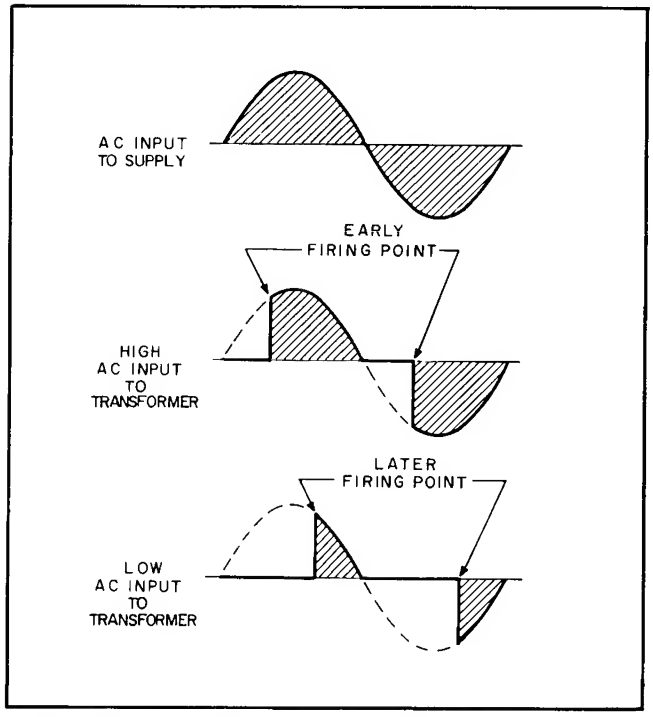

Figure 4-3. Triac Phase Control of AC Input Amplitude

The components of the A2 RFI Assembly are all mounted inside a shielded box to minimize radiated and reflected RFI. Further RFI suppression is provided by line bypass capacitors.

4-20 The preregulator control circuit samples the input line voltage, the dc input to the series regulator, and the voltage across the series transistor. It generates firing pulses that fire the triac and adjusts the phase of these pulses so that the dc voltage across the series regulator remains constant.

4-21 The inputs to the control circuit are algebraically summed across capacitor C15. All inputs affect the time required to charge C15. The input line voltage is rectified by CR27, CR28, CR31, and CR33, attenuated by voltage divider R68 and R69, and applied to the summing point at the collector of Q22 (TP73) via capacitor C15. Capacitor C16 is used for smoothing purposes.

4-22 Transistor Q22, connected in a common base configuration, provides a charging current to the summing capacitor which varies with the input signals applied to its emitter. Resistor R86, connected between the negative output line and the emitter of Q22, furnishes a signal proportional to the output voltage. Resistors R87 and R79 sample the voltage across, and the current through, the series regulator. Resistors R74 and R75 are the source of a constant offset current to the summing point, which ensures that the triac will fire at low output voltages. Capacitor C17 and resistor R78 stabilize the entire preregulator feedback loop.

4-23 The summation of these input signals results in a voltage waveform at TP73 similar to that shown in waveform (A) of Figure 4-4. When the linear ramp portion of the waveform reaches a certain negative threshold, diodes CR43 and CR44 become forward biased. These diodes couple a negative voltage to the base of transistor Q19. Transistors Q19 and Q18 form a bistable circuit similar to a Schmitt trigger. Prior to firing time, Q19 is conducting due to the positive bias supplied to its base through R73, and transistor Q18 is cut off because its base is driven negative by the collector of Q19.

4-24 When the negative threshold voltage is reached, transistor Q19 is turned off and Q18 is turned on. The conduction of Q18 allows capacitor C18 to discharge rapidly through pulse transformer T3, generating a firing pulse across the secondary of T3. Diode CR40 blocks any positive overshoot.

4-25 The control circuit is reset once every 8.33 milliseconds when the rectified ac voltage at the junction of CR36, CR37, and CR38 (TP64) forward biases diode CR38. Summing capacitor C15 is then allowed to discharge through CR38. Diodes CR44 and CR43 become reverse biased at

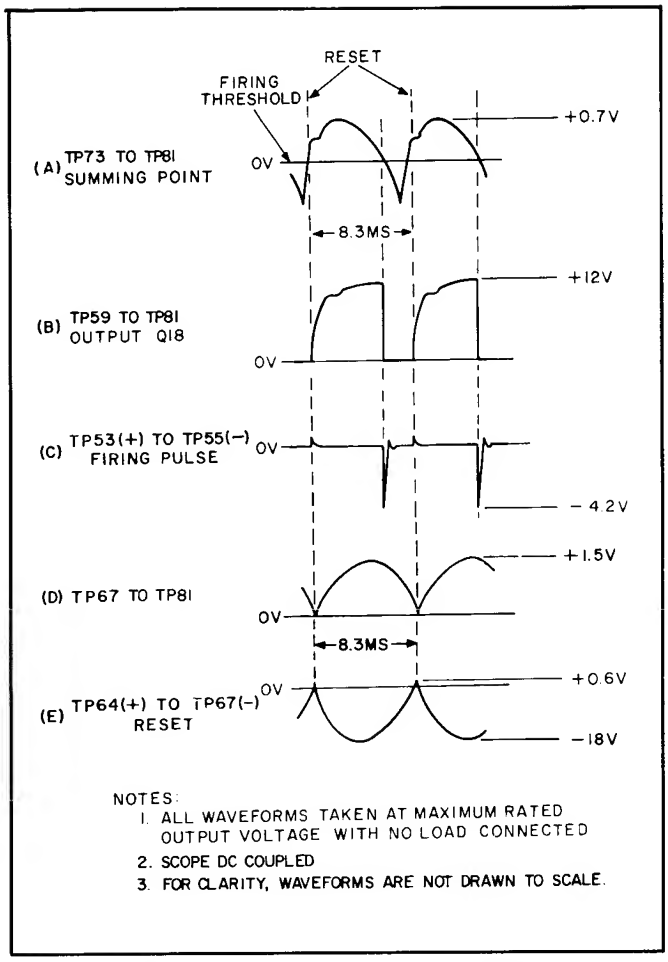

Figure 4-4. Preregulator Control Circuit Waveforms

reset, allowing Q19 to turn on. Consequently, Q18 is turned off and capacitor C18 charges up through R71 at a comparatively slow rate until the collector voltage of Q18 reaches approximately +12 volts.

4-26 Series Regulator And Driver

4-27 The series regulator consists of transistor Q6 (in the 3 1/2-inch-high models) or Q6 and Q7 connected in parallel (in the 5 1/4-inch-high models). These transistors serve as the series element which provides precise and rapid control of the output. The series transistor(s) are controlled by driver Q3. Diode CR11 is connected across the regulator circuit to protect the series elements from reverse voltages that could develop if one supply is turned on or off before the other during parallel operation.

4-28 Short-Circuit Protection

4-29 The short-circuit protection circuit protects the series regulator against damage due to a simultaneous full-voltage full current condition as might occur if the output were shorted while the controls were set to deliver a high output voltage and current. If this occurs, the preregulator is shut off and Q13 is turned on due to the increased voltage across the series regulator. The conduction of Q13 puts R66 in parallel with the current controls to limit the output current to less than 10% of the supply's rating. The input capacitor then begins to discharge through the series regulator, and the voltage across the regulator decreases until Q13 turns off. The discharge time (typically 1/2 to 4 seconds) depends on the voltage and current ratings of the supply, the size of the main filter capacitor, and the control settings. Once this recovery time has elapsed, the output current returns to the level set by the current controls, and the preregulator returns the voltage across the series regulator to the normal 4-volt level.

4-30 Constant-Voltage Comparator

4-31 The constant-voltage comparator consists of programming resistors R10 and R11, differential amplifier Z1, and associated components. An integrated circuit is used for the differential amplifier to minimize voltage differentials due to mismatched transistors or temperature differences.

4-32 The constant-voltage comparator compares the voltage drop across the VOLTAGE controls with the supply's output voltage. If a difference exists, it produces an error voltage proportional to this difference. This error signal alters the conduction of the series regulator, which changes the output voltage until it is equal to the voltage drop across the VOLTAGE controls. Hence, through feedback action, the difference between the two inputs to Z1 is held at zero volts.

4-33 One input of the differential amplifier (pin 10) is connected to the output voltage sensing terminal of the supply (+S) through impedance equalizing resistor R5. Resistors R6 and R8 zero bias the input. If the supply is equipped with Option 020 or 040, resistor R123 and potentiometer R124 provide a variable input bias that allows the output voltage to be easily adjusted to exactly zero volts when the supply is programmed for zero output. The other input of the differential amplifier (pin 1) is connected to a summing point (terminal A2) at the junction of the programming resistors and current pullout resistors R9, R12, and R13. Instantaneous changes in the output voltage or changes in the voltage at the summing point due to changes in the VOLTAGE control setting produce a difference voltage between the two inputs of the differential amplifier. This difference voltage is amplified and appears at the output of the differential amplifier (pin 12) as an error voltage which ultimately varies the conduction of the series regulator.

4-34 Resistor R1, in series with the summing point

input to the differential amplifier, limits the current flowing into the differential amplifier during rapid voltage turn-down. Diode CR20 prevents excessive current drain from the +6.2 volt reference supply during rapid down-programming. Diodes CR1 and CR2 prevent excessive voltage excursions from overdriving the differential amplifier.

4-35 During constant-voltage operation, the programming current flowing through the programming resistors (VOLTAGE controls) is constant because the summing point is held constant at zero volts by feedback action and virtually all of the reference supply current flowing through pull-out resistors R9, R12, and R13 flows through VOLTAGE controls R10 and R11. Linear constant-voltage programming is thus assured. Resistor R13 serves as a trimming adjustment for the programming current flowing through R10 and R11. If the supply is equipped with Option 020 or 040, resistor R121 and potentiometer R122 allow the programming current to be adjusted over a narrow range around its nominal value. In practice, this adjustment sets the power supply output to exactly the maximum rated voltage when programmed to that level.

4-36 Main output capacitor C20, connected across the output terminals of the supply, stabilizes the series regulator feedback loop when the normal strapping pattern shown on the schematic is used. This capacitor can be removed (by unstrapping terminal A8) to avoid output current surges or to increase the programming speed of the supply. If C20 is removed, capacitor C19 insures loop stability.

4-37 Constant-Current Comparator

4-38 The constant-current comparator is similar in appearance and operation to the constant voltage comparator. It consists of programming resistors R16 and R17, differential amplifier Z1, and associated components.

4-39 The constant-current comparator circuit compares the voltage drop across the CURRENT controls with the voltage drop across current sampling resistor R54. If a difference exists, the differential amplifier produces an error signal proportional to this difference. The remaining components in the feedback loop (amplifiers and the series regulator) maintain the drop across the current sampling resistor, and hence the output current, at a constant value.

4-40 One input of the differential amplifier (pin 7) is connected to the output bus through impedance equalizing resistor R26. Its other input (pin 4) is connected to a summing point (terminal A6) at the junction of programming resistors R16 and R17 and current pullout resistors R18 and R19. Instantaneous changes in the output current due to load changes or changes in the voltage at the summing point due to changes in the CURRENT control setting produce a difference voltage between the two inputs of the differential amplifier. This difference voltage is amplified and appears at the output of the differential amplifier (pin 6) as an error voltage which ultimately varies the conduction of the series regulator.

4-41 Resistor R19 serves as a trimming adjustment for the programming current flowing through R16 and R17. If the supply is equipped with Option 021 or 040, resistor R125 and potentiometer R126 allow the programming current to be adjusted over a narrow range around its nominal value, and resistor R127 and potentiometer R128 provide a variable input bias to allow the output current to be easily adjusted to exactly zero when the supply is programmed for zero output. Diode CR5 limits excessive voltage excursions at the summing-point input to the differential amplifier.

4-42 Voltage Clamp Circuit

4-43 The voltage clamp circuit keeps the constant-voltage programming current relatively constant when the power supply is operating in the constant-current mode. This is accomplished by clamping terminal A2, the voltage summing point, to a fixed bias voltage. During constant-current operation the constant-voltage progarmming resistors are a shunt load across the output terminals of the supply. When the output voltage changes, the current through these resistors also tends to change. Since this programming current flows through the current sampling resistor, it is erroneously interpreted as a load change by the current comparator circuit. The voltage clamp eliminates this undesirable effect by maintaining the programming current at a constant level.

4-44 The voltage divider consisting of Z2A, Z2B, and VR3 back biases CR30 and Q10 during constant-voltage operation. When the power supply goes into constant-current operation, CR30 becomes forward biased by the voltage at pin 12 of Z1. This results in conduction of Q10 and the clamping of the summing point at a potential only slightly more negative than the normal constant-voltage potential. Clamping this voltage at approximately the same potential that exists in constant-voltage operation results in a constant voltage across, and consequently a constant current through, current pullout resistors R9, R12, and R13.

4-45 Mixer and Error Amplifiers

4-46 The mixer and error amplifiers amplify the error signal received from the constant-voltage or constant-current input circuit to a level sufficient to drive the series regulator transistors. Mixer amplifier Q5 receives the error voltage

input from either the constant-voltage or constant-current comparator via the OR-gate diode (CR3 or CR4) that is conducting at the time. Diode CR3 is forward biased and CR4 reverse biased during constant-voltage operation. The reverse is true during constant-current operation.

4-47 Transistor Q11 provides a constant current to the collector of Q5 and also generates a negative-going turn-off signal for the series regulator when the unit is first turned off. Feedback network C5 and R30 shapes the high frequency rolloff in the loop gain response in order to stabilize the series regulator feedback loop.

4-48 Error amplifiers Q4 and Q12 serve as the pre-driver elements for the series regulator.

4-49 Overvoltage Protection Crowbar

4-50 The overvoltage protection crowbar circuit protects sensitive loads against the application of an excessively high voltage, as might result from a series regulator transistor failure. It accomplishes this by immediately shorting the output of the supply as soon as a preset threshold voltage is exceeded. Until silicon controlled rectifier CR57 has been triggered, it acts as an open circuit and has no effect on the output voltage. Transistors Q24 and Q25 detect an overvoltage condition and trigger the SCR to fire. When the SCR fires, it shorts the supply's output.

4-51 During normal operation, Q24 is biased on by current through R110, Q25 is kept turned off by Q24, and CR59 is reverse biased by the voltage divider formed by resistors R106, R108, and R109. Zener diode VR5 provides a stable reference voltage with which the –S potential is compared. Potentiometer R109 (OVERVOLTAGE ADJUST) establishes the output voltage at which CR59 becomes forward biased and turns Q24 off. When Q24 turns off, Q25 begins to conduct, sending a positive-going trigger pulse to CR57 and causing it to create a near short circuit across the output. When CR57 fires, overvoltage lamp DS2 turns on, completing a path for a +12V unregulated holding current through DS2. (R101 supplies the holding current if lamp DS2 should open.) This current holds CR57 on even after the output voltage has fallen. CR57 remains in conduction until the supply is turned off. R102 protects CR56 and CR57 from the large surge current that occurs when CR57 is first fired. CR58 damps out negative overshoot in the trigger pulse.

4-52 The firing of CR57 biases Q23 into conduction. This places approximately +12 volts on the cathode of CR44 in the preregulator control circuit to reverse bias CR43 and CR44. By preventing transistor Q19 from turning off, this prevents the generation of any trigger pulses and turns off the preregulator.

4-53 The crowbar circuit creates an extra current path during normal operation of the supply, thus changing the current that flows through the sampling resistor. Diode CR9 keeps this extra current at a fixed level for which compensation can then be made in the constant-current comparator circuit.

4-54 A slaving arrangement for the crowbar circuits in more than one supply is made possible by an extra secondary winding (terminals 5 and 6) on T4. When units have these windings connected in parallel, their crowbars are activated if any one of the crowbars is tripped. To reset the crowbars in this arrangement, all of the units must be turned off and then on. Polarity must be observed when connecting units in this fashion.

4-55 Turn-On Control Circuit

4-56 The turn-on control circuit is a long-time-constant network which protects the triac and the series regulator from possible damage during turn-on. When the supply is first turned on, C22 applies a positive voltage to the anodes of CR47 and CR50. Diode CR50 couples this voltage to the cathode of CR44 in the preregulator control circuit to ensure that it is initially reverse biased. After C22 becomes sufficiently charged, CR50 becomes reverse biased and the preregulator control circuit is permitted to fire the triac.

4-57 Diode CR47 performs a similar function for the series regulator. This diode initially couples a positive voltage to Q5, which inverts it and applies it to the series regulator. This negative voltage keeps the regulator cut off until C22 charges up. Diode CR45 provides a discharge path for C22 when the supply is turned off.

4-58 Reference Regulator

4-59 The reference circuit is a feedback power supply similar to the main supply. It provides stable reference voltages used throughout the unit. All the regulated reference voltages are derived from dc obtained from full-wave rectifier CR10 and CR12 and filter capacitor C10. Zener diodes VR1 and VR2 establish well regulated potentials of +6.2V and –6.2V with respect to common point +S, while the regulator circuit establishes a well regulated potential of +12.4 volts. Resistor R48 establishes an optimum bias current through the zener diodes.

4-60 The regulating circuit consists of series regulating transistor Q9, driver Q16, and differential amplifier Q14 and Q15. The voltage across zener diodes VR1 and VR2 is compared to the voltage across resistor Z2J, and any difference is amplified by Q14 and Q15. The error voltage thus appearing at the collector of Q14 is amplified by driver stage Q16 and applied to series regulator Q9 in the

correct phase and amplitude to maintain the +12.4 volt output at a constant level.

4-61 Diode CR7, connected from voltage divider R34 and R39 to the base of Q16, serves as a turn-on circuit for series regulator transistor Q9. When the supply is first turned on, CR7 biases driver Q16 on, thus turning on the series regulator. When the reference supply reaches normal output, the base voltage of Q16 is sufficient to reverse bias CR7, thus effectively removing it from the circuit. Capacitor C9, connected across the output of the reference supply, removes spikes and stabilizes the reference regulator loop.

4-62 A separate winding on transformer T2, diodes CR13 and CR14, and filter capacitor C12 provide an unregulated +12Vdc output. Additional reference voltages of −2.4 volts and −4.8 volts are provided by zener diodes VR6 and VR7. Resistor R60 biases the zeners. Diode CR15 prevents reverse current flow from damaging the main supply series regulator transistor(s). Diode CR20, shown on the schematic near current pullout resistors R9, R12, and R13, protects the zener diodes in the reference circuit by providing a path for surge currents that occur during rapid down-programming.

4-63 Meter Circuit

4-64 The front panel voltmeter and ammeter provide continuous indications of output voltage and current. Both meter movements can withstand an overload of many times the maximum rated output without damage.

4-65 The ammeter, together with its series resistors R62 and R63, is connected across current sampling resistor R54. As mentioned previously, the voltage drop across R54 varies in proportion to the output current. Potentiometer R63 permits calibration of the ammeter.

4-66 The voltmeter, in series with R44 and R49 and shunted by R56 and R57, is connected directly across the output terminals of the supply. Potentiometer R56 permits calibration of the voltmeter.

4-67 Additional Protection Features

4-68 The supply contains several special purpose components that protect it in the event of unusual circumstances. One of these components is diode CR34. Connected across the output terminals of the supply, it prevents internal damage from reverse voltages that might be applied across the supply. This could occur, for example, during Auto-Series operation if one supply were turned on or off before the other.

4-69 Resistors R58 and R59 limit the output of the supply if the straps between the output buses and the sensing terminals (+S and −S) are inadvertently removed.

4-70 Diode CR11, previously mentioned in the series regulator description, protects the regulating transistor from reverse voltages.

SECTION V
MAINTENANCE

5-1 INTRODUCTION

5-2 Upon receipt of the power supply, the performance test (paragraph 5-5) should be made. This test is suitable for incoming inspection. If a fault is detected in the power supply while making the performance test or during normal operation, proceed to the troubleshooting procedures (paragraph 5-49). After troubleshooting and repair (paragraph 5-60) perform any necessary adjustments and calibrations (paragraph 5-62). Before returning the power supply to normal operation, repeat the applicable portions of the performance test to ensure that the fault has been properly corrected and that no other faults exist. Before performing any maintenance checks, turn on the power supply and allow a half-hour warm-up.

Table 5-1. Test Equipment Required

TYPE	REQUIRED CHARACTERISTICS	USE	RECOMMENDED MODEL
Digital Voltmeter	Sensitivity: 100μV full scale (min.) Input impedance: 10MΩ (min.)	Measure dc voltages; calibration procedures.	HP 3450B
Oscilloscope	Sensititivy and bandwidth: 100μV/cm and 400kHz for all measurements except noise spike; 5mV sensitivity and 20MHz bandwidth for noise spike measurement.	Measure ripple; display transient recovery waveform; measure noise spikes.	HP 180C with 1821A time base and 1806A vertical plug-in; 1803A plug-in for spike measurement
Variable Voltage Transformer	Range: 90-130 volts. Output current: 200% (min.) of supply input current listed in para. 2-16.	Vary ac input for line regulation measurement.	– – –
Digital or Analog Multimeter		Measure ac and dc voltages, resistance.	HP 3490A or HP 427A
Repetitive Load Switch	Switching rate: 60-400Hz. Rise time: 2μsec.	Measure transient recovery time.	See Figure 5-4.
Resistive Load	Values: see Figures 5-1 and 5-4.	Power supply load resistor.	– – –
Current Sampling Resistor	Value: see Figure 5-7.	Measure output current; calibrate ammeter.	– – –
Terminating Resistors	Value: 50 ohms, 1/2 watt, ±5% non-inductive. (Four required.)	Noise spike measurement.	– – –
Blocking Capacitors	Value: 0.01μF, 100Vdc. (Two required.)	Noise spike measurement.	– – –

5-3 TEST EQUIPMENT REQUIRED

5-4 Table 5-1 lists the test equipment required to perform the procedures described in this section.

5-5 PERFORMANCE TEST

5-6 The following test can be used as an incoming inspection check. Appropriate portions of the test can be repeated either to check the operation of the instrument after repairs or for periodic maintenance tests. The tests are performed using a 115Vac 60Hz single-phase input power source. If the correct result is not obtained for a particular check, do not adjust any internal controls; instead proceed to troubleshooting (paragraph 5-49).

5-7 CONSTANT-VOLTAGE TESTS

5-8 Connect all of the measuring devices used in the constant voltage performance tests directly to the power supply sensing terminals (±S). For best accuracy, the sensing terminals must be used rather than the output terminals, since the measuring instruments must be connected to the same pair of terminals to which the feedback amplifier within the power supply is connected. This is particularly important when measuring the regulation, transient response, or ripple of the power supply. Note that the measuring instruments should not be connected across the load. A measurement made across the load includes the impedance of the leads to the load and such lead lengths can easily have an impedance several orders of magnitude greater than the supply impedance (typically 1 milliohm at dc), thus invalidating the measurement.

5-9 To avoid mutual coupling effects, connect each monitoring device to the sensing terminals by a separate pair of leads. Use twisted pairs or shielded two-wire cables to avoid pickup on the measuring leads. Connect the load resistor across the output terminals as close to the supply as possible. When measuring the constant-voltage performance specifications set the current controls well above (at least 10% above) the maximum output current the supply will draw, since the onset of constant-current operation will cause a drop in output voltage, increased ripple, and other performance changes not properly ascribed to the constant-voltage operation of the supply.

5-10 Voltage Output and Voltmeter Accuracy. To check that the supply will furnish its rated output voltage, proceed as follows:

a. Connect load resistor (R_L) indicated in Figure 5-1 across output terminals of supply.

b. Connect digital voltmeter across (+S) and (−S) terminals of supply, observing correct polarity.

c. Turn CURRENT controls fully clockwise.

d. Turn on supply and adjust VOLTAGE controls until front panel meter indicates exactly maximum rated output voltage.

e. Digital voltmeter should indicate:

6256B	10 ±0.2Vdc
6263B, 6264B	20 ±0.4Vdc
6265B, 6266B, 6267B	40 ±0.8Vdc
6271B, 6274B	60 ±1.2Vdc

5-11 Load Effect (Load Regulation).

Definition: The change ΔE_{OUT} in the static value of dc output voltage resulting from a change in load resistance from open circuit to a value which yields maximum rated output current, or vice versa.

5-12 To check the constant-voltage load effect, proceed as follows:

a. Connect test setup shown in Figure 5-1.

b. Turn CURRENT controls fully clockwise.

c. Turn on supply and adjust VOLTAGE controls until front panel meter indicates exactly maximum rated output current.

d. Read and record voltage indicated on digital voltmeter.

e. Disconnect load resistor.

f. Reading on digital voltmeter should not differ from reading recorded in step (d) by more than :

6256B	1.2mV
6263B, 6264B	2.2mV
6265B, 6266B, 6267B	4.2mV
6271B, 6274B	6.2mV

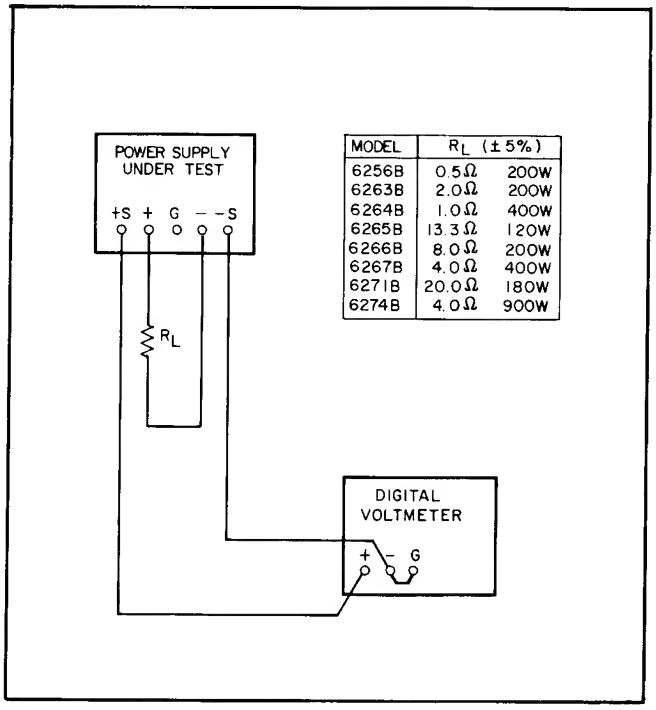

MODEL	R_L (±5%)	
6256B	0.5Ω	200W
6263B	2.0Ω	200W
6264B	1.0Ω	400W
6265B	13.3Ω	120W
6266B	8.0Ω	200W
6267B	4.0Ω	400W
6271B	20.0Ω	180W
6274B	4.0Ω	900W

Figure 5-1. Constant-Voltage Load Regulation Test Setup

5-13 Source Effect (Line Regulation).

Definition: The change ΔE_{OUT} in the static value of dc output voltage resulting from a change in ac input voltage over the specified range from low line to high line, or from high line to low line.

5-14 To check the source effect, proceed as follows:

a. Connect test setup shown in Figure 5-1.

b. Connect variable autotransformer between input power source and power supply power input.

c. Adjust autotransformer for 104Vac input.

d. Turn CURRENT controls fully clockwise.

e. Turn on supply and adjust VOLTAGE controls until front panel meter indicates exactly maximum rated output voltage.

f. Read and record voltage indicated on digital voltmeter.

g. Adjust variable autotransformer for 127Vac input.

h. Digital voltmeter reading should not differ from reading recorded in step (f) by more than:

6256B	1.2mV
6263B, 6264B	2.2mV
6265B, 6266B, 6267B	4.2mV
6271B, 6274B	6.2mV

5-15 PARD (Ripple and Noise)

Definition: The residual ac voltage superimposed on the dc output of a regulated power supply. Ripple and noise measurements may be made at any input ac line voltage combined with any dc output voltage and load current within the supply's rating.

5-16 The amount of ripple and noise present on the power supply output is measured either in terms of its rms or (preferably) peak-to-peak value. The peak-to-peak measurement is particularly important for applications where noise spikes could be detrimental to sensitive loads such as logic circuitry. The rms measurement is not an ideal representation of the noise since fairly high output noise spikes of short duration can be present in the ripple without appreciably increasing the rms value.

5-17 Ripple Measurement Techniques. Figure 5-2A shows an incorrect method of measuring peak-to-peak ripple. Note that a continuous ground loop exists from the third wire of the input power cord of the supply to the third wire of the input power cord of the oscilloscope via the grounded power supply case, the internal jumper connecting the power supply negative output and sensing terminals, the wire between the negative sensing terminal of the power supply and the vertical input of the scope, and the grounded scope case. Any ground current circulating in this loop as a result of the difference in potential E_G between the two ground points causes an IR drop which is in series with the scope input. This IR drop, normally having a 60Hz line frequency fundamental, plus any pickup on the unshielded leads interconnecting the power supply and scope, appears on the face of the CRT. The magnitude of this resulting noise signal can easily be much greater than the true ripple developed between the plus and minus sensing terminals of the power supply and can completely invalidate the measurement.

5-18 The same ground current and pickup problems can exist if an rms voltmeter is substituted for the oscilloscope in Figure 5-2. However, the oscilloscope display, unlike the true-rms meter reading, tells the observer immediately whether the fundamental period of the signal displayed is 8.3 milliseconds (1/120Hz) or 16.7 milliseconds (1/60Hz). Since the fundamental ripple frequency present on the output of an HP supply is 120Hz (due to full-wave rectification), an oscilloscope display showing a 120Hz fundamental component indicates a "clean" measurement setup, while the presence of a 60Hz fundamental usually means that an improved setup will result in a more accurate (and lower) value of measured ripple.

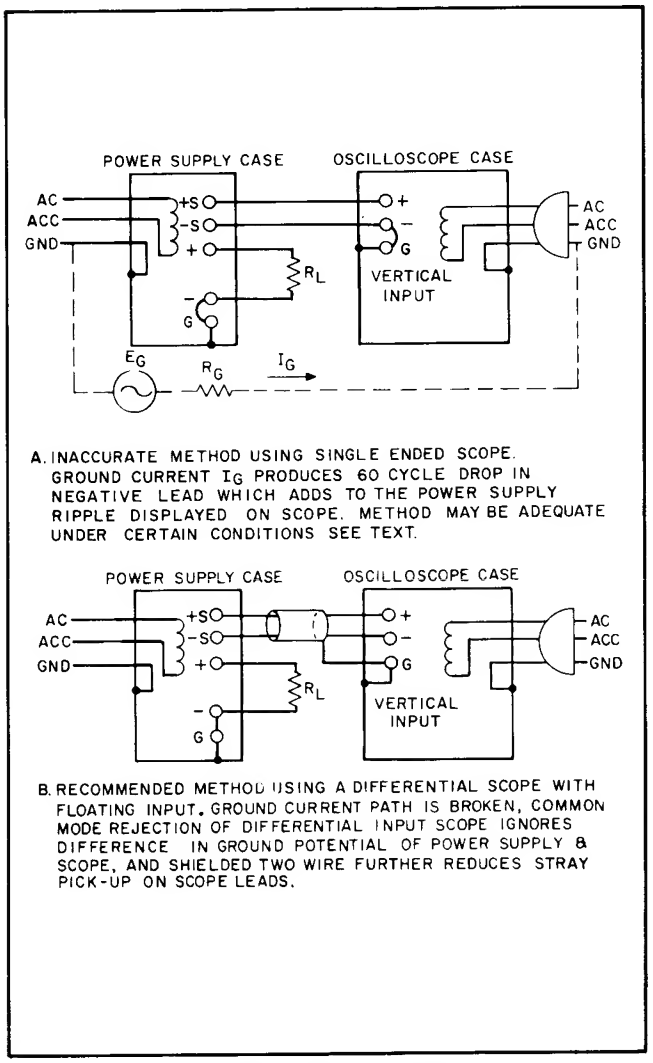

Figure 5-2. Ripple Test Setup

5-19 Although the method shown in Figure 5-2A is not recommended for ripple measurements, it may prove satisfactory in some instances provided certain precautions are taken. One method of minimizing the effects of ground current flow (I_G) is to ensure that both the supply and the test instrument are plugged into the same ac power bus.

5-20 To minimize pickup, a twisted pair or (preferably) a shielded two-wire cable should be used to connect the sensing terminals of the power supply to the vertical input terminals of the scope. When using a twisted pair, take care that the same wire is connected both to the grounded terminal of the power supply and the grounded input terminal of the oscilloscope. When using shielded two-wire cable, it is essential for the shield to be connected to ground at only one end to prevent any ground current flowing through this shield from inducing a signal in the shielded leads.

5-21 To verify that the oscilloscope is not displaying ripple that is induced in the leads or picked up from the grounds, short the (+) scope lead to the (−) scope lead at the power supply terminals. The ripple value obtained when the leads are shorted should be subtracted from the indicated ripple measurement.

5-22 If the foregoing measures are used, the single-ended scope of Figure 5-2A might be adequate to eliminate extraneous ripple components so that a satisfactory measurement can be obtained. However, in stubborn cases or in measurement situations where it is essential that both the power supply case and the oscilloscope case be connected to ground (if both are rack-mounted, for example), it may be necessary to use a differential scope with floating input as shown in Figure 5-2B. If desired, two single-conductor shielded cables may be substituted in place of the shielded two-wire cable with equal success. Because of its common mode rejection, a differential oscilloscope displays only the difference in signal between its two vertical input terminals, thus ignoring the effects of any common mode signal produced by the difference in the ac potential between the power supply case and scope case. Before using a differential input scope, however, it is imperative that the common mode rejection capability of the scope be verified by shorting together its two input leads at the power supply and observing the trace on the CRT. If this trace is a straight line, then the scope is properly ignoring any common mode signal present. If this trace is not a straight line, then the scope is not rejecting the ground signal and must be realigned in accordance with the manufacturer's instructions so that proper common mode rejection is attained.

5-23 Ripple Measurement Procedure. To check the ripple output, proceed as follows:

a. Connect oscilloscope or rms voltmeter as shown in Figures 5-2A or 5-2B.

b. Turn CURRENT controls fully clockwise.

c. Turn on supply and adjust VOLTAGE controls until front panel meter indicates maximum rated output voltage.

d. The observed ripple should be less than:

All models except 6274B	200μV rms, 10mV p-p
6274B	200μV rms, 20mV p-p

5-24 Noise Spike Measurements. An instrument of sufficient bandwidth must be used when making a high frequency spike measurement. An oscilloscope with a bandwidth of 20MHz or more is adequate. Measuring noise with an instrument that has insufficient bandwidth may conceal high frequency spikes that could be detrimental to the load.

5-25 The test setup illustrated in Figure 5-2A is generally not adequate for measuring spikes; a differential oscilloscope is necessary. Furthermore, the measurement technique of Figure 5-2A must be modified as follows if accurate spike measurement is to be achieved:

1. As shown in Figure 5-3, two coax cables must be substituted for the shielded two-wire cable.
2. Impedance matching resistors must be included to eliminate standing waves and cable ringing, and capacitors must be connected to block dc current.
3. The length of the test leads outside the coax is critical and must be kept as short as possible. The blocking capacitor and impedance matching resistor should be connected directly from the inner conductor of the cable to the power supply sensing terminal.
4. Notice that the shields at the power supply end of the two coax cables are not connected to the power supply ground since such a connection would give rise to a ground current path through the coax shield and result in an erroneous measurement.

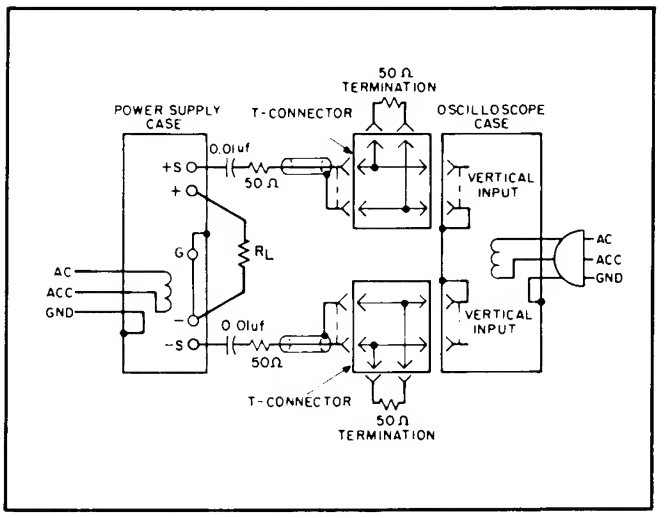

Figure 5-3. Noise Spike Measurement Test Setup

5. Since the impedance matching resistors constitute a 2-to-1 attenuator, the noise spikes observed on the oscilloscope should be less than 10mV p-p for the Model 6274B or less than 5mV p-p for the other models.

5-26 The circuit of Figure 5-3 can also be used for the normal measurement of low frequency ripple. Simply remove the four terminating resistors and the blocking capacitors and substitute a higher gain vertical plug-in for the wide-band plug-in required for spike measurements. Notice that with these changes, Figure 5-3 becomes a two-cable version of Figure 5-2B.

5-27 Load Transient Recovery Time.

Definition: The time "X" for output voltage recovery to within "Y" millivolts of the nominal output voltage following a "Z" amp step change in load current, where: "Y" is specified as 10mV; the nominal output voltage is defined as the dc level halfway between the static output voltage before and after the imposed load change; and "Z" is the specified load current change of 5 amps or the full-load current rating of the supply, whichever is less. Load transient recovery time may be measured at any input line voltage combined with any output voltage and load current within rating.

5-28 Measurement Techniques. Care must be taken in switching the load resistance on and off. A hand-operated switch in series with the load is not adequate since the resulting one-shot displays are difficult to observe on most oscilloscopes and the arc energy occurring during switching completely masks the display with a noise burst. Transistor load switching devices are expensive if reasonably rapid load current changes are to be achieved.

5-29 We suggest that a mercury-wetted relay connected in the load switching circuit shown in Figure 5-4 be used for loading and unloading the supply. When this load switch is connected to a 60Hz ac input, the mercury-wetted relay opens and closes 60 times per second. The 25k control adjusts the duty cycle of the load current switching to reduce jitter in the oscilloscope display. This relay may also be used with a 50Hz ac input. The load resistance shown in Figure 5-4 is the minimum resistance that can be used without damaging the mercury-wetted relay contacts.

5-30 Measurement Procedure. To check the load transient recovery time, proceed as follows:

a. Connect test setup shown in Figure 5-4.

b. Turn CURRENT controls fully clockwise.

c. Turn on supply and adjust VOLTAGE controls until front panel ammeter indicates either 5 amps or the full-load current rating of the supply, whichever is less.

d. Close line switch on repetitive load switch setup.

e. Set oscilloscope for internal sync and lock on either the positive or negative load transient spike.

f. Set vertical input of oscilloscope for ac coupling so that small dc level changes in power supply output voltage will not cause display to shift.

g. Adjust the vertical centering on the scope so that the tail ends of the no-load and full-load waveforms are symmetrically displaced about the horizontal centerline of the oscilloscope. This centerline now represents the nominal output voltage defined in the specification.

h. Adjust the horizontal positioning control so that the trace starts at a major graticule division. This point then represents time zero.

i. Increase the sweep rate so that a single transient spike can be examined in detail.

j. Adjust the sync controls separately for the positive and negative-going transients so that not only the recovery waveshape but also as much as possible of the rise time of the transient is displayed.

k. Starting from the major graticule division representing time zero, count to the right 50μsec and vertically 10mV. Recovery should be within these tolerances as illustrated in Figure 5-5.

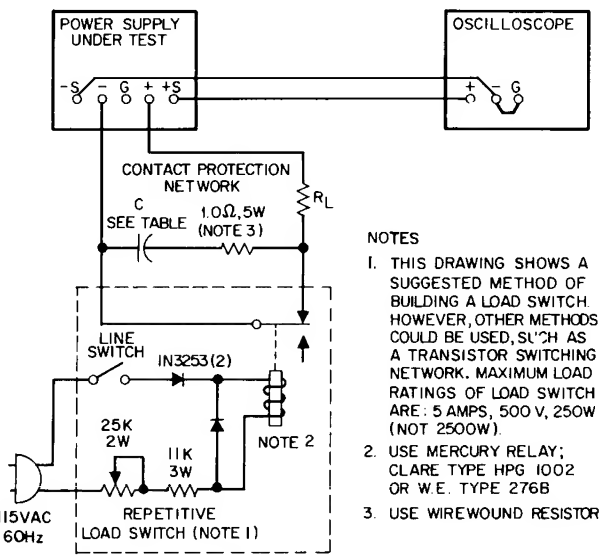

NOTES

1. THIS DRAWING SHOWS A SUGGESTED METHOD OF BUILDING A LOAD SWITCH. HOWEVER, OTHER METHODS COULD BE USED, SUCH AS A TRANSISTOR SWITCHING NETWORK. MAXIMUM LOAD RATINGS OF LOAD SWITCH ARE: 5 AMPS, 500 V, 250W (NOT 2500W).
2. USE MERCURY RELAY; CLARE TYPE HPG 1002 OR W.E. TYPE 276B
3. USE WIREWOUND RESISTOR.

MODEL	R_L (±5%)	C(400V)
6256B	2Ω 50W	2.5μF
6263B	4Ω 100W	2.5μF
6264B	4Ω 100W	2.5μF
6265B	13.3Ω 120W	1.0μF
6266B	8Ω 200W	2.5μF
6267B	8Ω 200W	2.5μF
6271B	20Ω 180W	1.0μF
6274B	12Ω 300W	2.5μF

Figure 5-4. Load Transient Recovery Time Test Setup

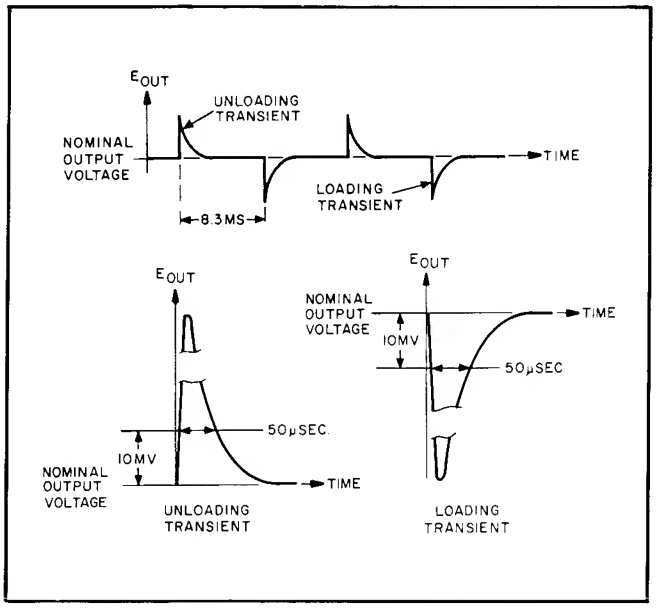

Figure 5-5. Load Transient Recovery Time Waveforms

5-31 Temperature Coefficient.

Definition: The change in output voltage per degree Celsius change in the ambient temperature measured while ac line voltage, output voltage setting, and load resistance are all held constant.

5-32 The temperature coefficient of a power supply is measured by placing the power supply in an oven and varying it over any temperature span within its rating. (Most HP power supplies are rated for operation from 0°C to 55°C.) The power supply temperature must be allowed to stabilize for a sufficient time at each measurement temperature.

5-33 The temperature coefficient given in the specifications is the maximum temperature-dependent output voltage change which will result over any one-degree interval. The digital voltmeter used to measure the supply's output voltage change should be placed outside the oven and should have a long-term stability adequate to insure that its drift will not affect the overall measurement accuracy.

5-34 To check the temperature coefficient, proceed as follows:

a. Connect load resistance and digital voltmeter as illustrated in Figure 5-1.

b. Turn CURRENT controls fully clockwise.

c. Turn on supply and adjust front panel VOLTAGE controls until front panel voltmeter indicates maximum rated output voltage.

d. Place power supply in temperature-controlled oven (digital voltmeter remains outside oven). Set temperature to 30°C and allow 30 minutes warm-up.

e. Record digital voltmeter reading.

f. Raise temperature to 40°C and allow 30-minutes warm-up.

g. Observe digital voltmeter reading. Difference in voltage reading between steps (e) and (g) should be less than:

6256B	12mV
6263B, 6264B	22mV
6265B, 6266B, 6267B	42mV
6271B, 6274B	62mV

5-35 Drift (Stability):

Definition: The change in output voltage for the first eight hours following a 30-minute warm-up period. During the interval of measurement, input line voltage, load resistance, and ambient temperature, are all held constant.

5-36 This measurement is made by monitoring the output of the power supply on a digital voltmeter over the stated measurement interval. A strip chart recorder can be used to provide a permanent record. Place a thermometer near the supply to verify that the ambient temperature remains constant during the period of measurement. The supply should be located away from any source of stray air currents. If possible, place the supply in an oven and hold it at a constant temperature. Take care that the measuring instrument has an eight-hour stability at least an order of magnitude better than the stability specification of the power supply being tested. Typically, a supply will drift less over the eight-hour measurement interval than during the half-hour warm-up period.

5-37 To check the output stability, proceed as follows:

a. Connect load resistance and digital voltmeter as illustrated in Figure 5-1.

b. Turn CURRENT controls fully clockwise.

c. Turn on supply and adjust front panel VOLTAGE controls until digital voltmeter indicates maximum rated output voltage.

d. Allow 30 minutes warm-up, then record digital voltmeter reading.

e. After 8 hours, digital voltmeter reading should not differ from the step (d) reading by more than:

6256B	3.5mV
6263B, 6264B	6.5mV
6265B, 6266B	12.5mV
6267B	14mV
6271B	18.5mV
6274B	20mV

5-38 CONSTANT-CURRENT TESTS

5-39 The instruments, methods, and precautions for the proper measurement of constant-current power supply characteristics are for the most part identical to those

already described for the measurement of constant-voltage characteristics. There are, however, two main differences: First, the power supply performance will be checked between short circuit and full load rather than open circuit and full load. Second, a current monitoring resistor is inserted between the output of the power supply and the load.

5-40 For all output current measurements, the current sampling resistor must be connected as a four-terminal device in the same manner as a meter shunt would be. The load current is fed to the extremes of the wire leading to the resistor while the sampling terminals are located as close as possible to the resistance element itself (see Figure 5-6). A current sampling resistor should have low noise, low temperature coefficient (less than 30ppm/°C) and should be used at no more than 5% of its rated power so that its temperature rise will be minimized.

NOTE

In case of difficulty obtaining a low resistance, high current resistor suitable for current sampling, a duplicate of the sampling resistor used in this unit (R54) may be obtained from the factory.

5-41 Current Output and Ammeter Accuracy. To check that the supply will furnish its rated output current, proceed as follows:

a. Connect test setup shown in Figure 5-7.
b. Turn VOLTAGE controls fully clockwise.
c. Turn on supply and adjust CURRENT controls until front panel ammeter indicates maximum rated output current.
d. Digital voltmeter should read 0.5 ±0.01Vdc.

5-42 Load Effect (Load Regulation).

Definition: The change ΔI_{OUT} in the static value of the dc output current resulting from a change in load resistance from short circuit to a value which yields maximum rated output boltage, or vice versa.

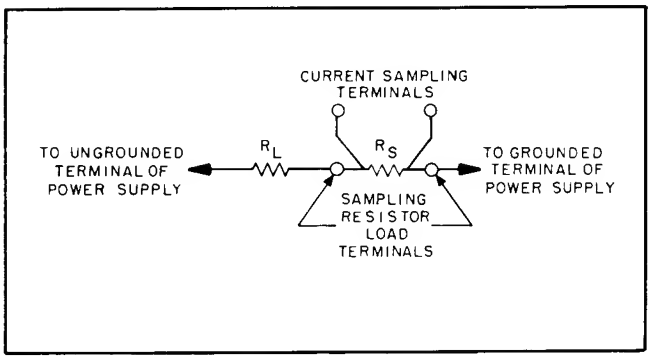

Figure 5-6. Current Sampling Resistor Connections

5-43 To check the constant-current load effect proceed as follows:

a. Connect test setup shown in Figure 5-7.
b. Turn VOLTAGE controls fully clockwise.
c. Turn on supply and adjust CURRENT controls until front panel ammeter indicates exactly maximum rated output current.
d. Read and record voltage indicated on digital voltmeter.
e. Short circuit load resistor (R_L).
f. Digital voltmeter reading should not differ from reading recorded in step (d) by more than:

6256B, 6264B	113μV
6263B, 6267B	125μV
6265B, 6271B	184μV
6266B	150μV
6274B	116μV

5-44 Source Effect (Line Regulation).

Definition: The change ΔI_{OUT} in the static value of dc output current resulting from a change in ac input voltage over the specified range from low line to high line or from high line to low line.

5-45 To check source effect, proceed as follows:

a. Connect test setup shown in Figure 5-7.
b. Connect variable autotransformer between input power source and power supply power input.
c. Adjust autotransformer for 104Vac input.
d. Turn VOLTAGE controls fully clockwise.
e. Turn on supply and adjust CURRENT controls until front panel ammeter reads exactly maximum rated output current.
f. Read and record voltage indicated on digital voltmeter.
g. Adjust autotransformer for 127Vac input.
h. Digital voltmeter reading should not differ from reading recorded in step (f) by more than:

6256B, 6264B	113μV
6263B, 6267B	125μV
6265B, 6271B	184μV
6266B	150μV
6274B	116μV

5-46 PARD (Ripple and Noise).

Definition: The residual ac current superimposed on the dc output of a regulated power supply. Ripple and noise measurement may be made at any input ac line voltage combined with any dc output voltage and load current within the supply's rating.

5-47 Most of the instructions pertaining to the ground loop and pickup problems associated with constant-voltage ripple and noise measurement also apply to the measurement of constant-current ripple and noise. Figure 5-8 illustrates the most important precautions to be observed when measuring the ripple and noise of a constant-current

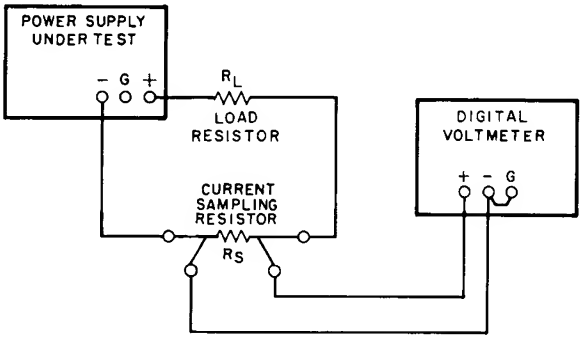

MODEL	R_L (±5%)	R_S LOW TC ALLOY ±20ppm
6256B	0.5Ω 200W	0.025Ω
6263B	2.0Ω 200W	0.050Ω
6264B	1.0Ω 400W	0.025Ω
6265B	13.3Ω 120W	0.167Ω
6266B	8.0Ω 200W	0.100Ω
6267B	4.0Ω 400W	0.050Ω
6271B	20.0Ω 180W	0.167Ω
6274B	4.0Ω 900W	0.033Ω

Figure 5-7. Constant-Current Load Regulation Test Setup

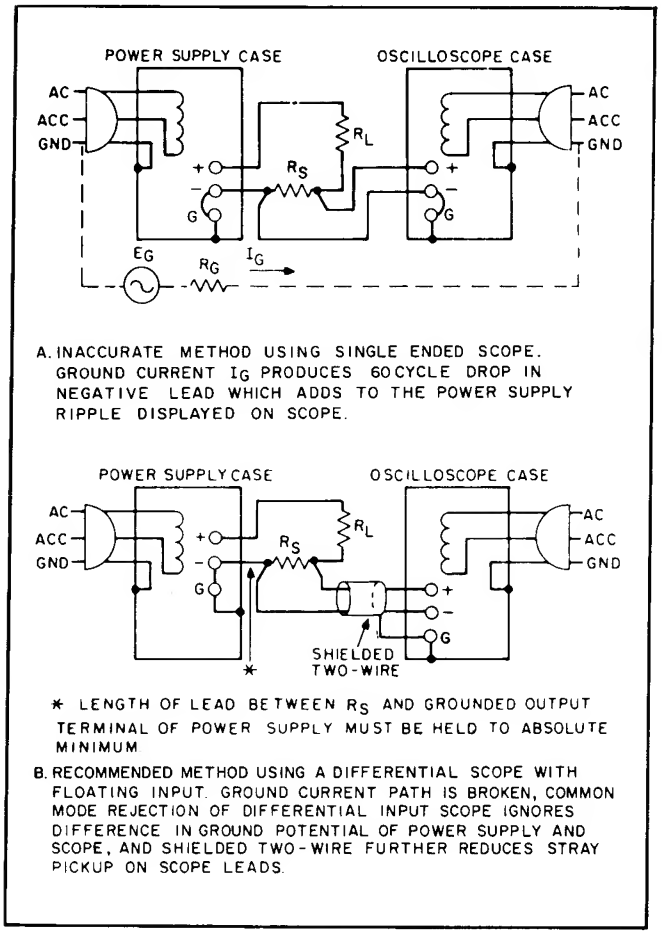

Figure 5-8. Constant-Current Ripple and Noise Test Setup

supply. The presence of a 120Hz waveform on the oscilloscope normally indicates a correct measurement method. A waveshape having 60Hz as its fundamental component usually indicates an incorrect measurement setup.

5-48 To check the ripple and noise, proceed as follows:

a. Connect oscilloscope or rms voltmeter as shown in Figure 5-8A or 5-8B.

b. Rotate VOLTAGE controls fully clockwise.

c. Turn on supply and adjust CURRENT controls until front panel ammeter reads exactly maximum rated output current.

d. The observed ripple and noise should be less than:

6256B, 6264B	125μV rms
6263B, 6267B	150μV rms
6265B, 6271B	501μV rms
6266B	300μV rms
6274B	165μV rms

5-49 TROUBLESHOOTING

5-50 Before attempting to troubleshoot this instrument, ensure that the fault is with the instrument and not with an associated circuit. The performance test (paragraphs 5-5 through 5-48) enables this to be determined without removing the instrument from the cabinet.

5-51 A good understanding of the principles of operation is a helpful aid in troubleshooting, and it is recommended that the reader review Section IV of the manual before attempting to troubleshoot the unit in detail. Once the principles of operation are understood, refer to the overall troubleshooting procedures in paragraph 5-54 to locate the symptom and probable cause.

5-52 The schematic diagram contains normal voltage readings adjacent to some test points. (Test points are identified by circled numbers.) The measurement conditions are listed in the Schematic Notes. Consult the component location diagrams in Section VII to determine the locations of components and test points.

5-53 If a component is found to be defective, replace it and re-conduct the performance test. When a component is replaced, refer to the repair and replacement (paragraph 5-60) and adjustment and calibration (paragraph 5-62) sections of this manual.

5-54 OVERALL TROUBLESHOOTING PROCEDURES

5-55 To locate the cause of trouble, follow steps 1, 2, and 3 in sequence:

(1) Check for obvious troubles such as a defective power cord, an input power failure, or a defective meter.

Next, remove the top and bottom covers and inspect for open connections, charred components, or any other visible defects. If the trouble source cannot be detected by visual inspection, proceed to step (2).

(2) In almost all cases, the trouble can be caused by incorrect dc bias or reference voltages; thus, it is a good practice to check the voltages in Table 5-2 before proceeding with step (3).

(3) Disconnect the load and examine Table 5-3 for your symptom and its probable cause.

5-56 Table 5-3 contains symptoms and probable causes of many possible troubles. If either high or low output voltage is a symptom, Table 5-4 contains the steps necessary to isolate the trouble to one of the feedback loops and instructions directing the tester to the proper table for further isolation. Because of the interactions between loops, it is necessary to refer to Table 5-4 before proceeding to Tables 5-5, 5-6, or 5-7.

5-57 Tables 5-5, 5-6, and 5-7 contain troubleshooting procedures for the series regulator and preregulator feedback loops once the fault has been isolated to one of them. Tables 5-5 and 5-6 contain instructions for driving each stage into conduction or cut-off. By following the steps in these tables, the fault can be isolated to a circuit or a component.

5-58 Table 5-7 contains troubleshooting procedures for the preregulator feedback loop. Troubleshooting is accomplished by comparing waveform illustrations with the waveforms found at various test points and then checking the components most likely to be at fault.

5-59 After troubleshooting the unit, it may be necessary to perform one or more of the calibration procedures given in this section.

WARNING

Some circuits in this power supply are connected directly to the input ac power line. The red-painted case and heatsink of the A2 RFI Assembly are also at ac line potential. Exercise extreme caution when working on energized circuits.

Table 5-2. Reference and Bias Voltages
(Refer to schematic and component location diagrams in Section VII for test point locations)

STEP	METER COMMON	METER POSITIVE	NORMAL VDC	NORMAL RIPPLE (P-P)	PROBABLE CAUSE
1	+S	TP31	12.4 ±5%	2.0mV	Q9, 14, 15, 16; VR1, 2; CR7
2	+S	TP25	6.2 ±2%	0.5mV	VR1, VR2, R48
3	TP24	+S	6.2 ±2%	2.0mV	VR1, VR2, R48
4	+S	TP44	12 ±15%	2.0V	CR13, CR14, C12
5	TP45	+S	4.8 ±10%	0.8V	CR13, CR14, C12, VR6, VR7
6	TP80	+S	2.4 ±10%	0.4V	CR13, CR14, C12, VR6, VR7

Table 5-3. Overall Troubleshooting

SYMPTOM	PROBABLE CAUSE
Low or no output voltage (OVERVOLTAGE lamp may be on or off)	a. Front panel meter defective. b. Crowbar not reset or defective. Refer to Table 5-4. c. Series regulator or preregulator feedback loop defective. Refer to Table 5-4.
High output voltage	a. Front panel meter defective. b. Series regulator or preregulator loop defective. If crowbar does not trip, it too is faulty. Refer to Table 5-4.

Table 5-3. Overall Troubleshooting (Continued)

SYMPTOM	PROBABLE CAUSE
High ripple	a. Ground loops in operating setup. Refer to paragraph 5-17. b. Incorrect reference or bias voltages. Refer to Table 5-2. c. Supply crossing over to constant-current operation under loaded conditions. Check current limit setting or constant-current comparator circuit (Z1 and associated components).
Poor line regulation	a. Improper measurement technique. Refer to paragraph 5-13. b. Incorrect reference or bias voltages. Refer to Table 5-2.
Poor load regulation (Constant-voltage)	a. Improper measurement technique. Refer to paragraph 5-11. b. Incorrect reference or bias voltages. Refer to Table 5-2. c. Supply current limiting. Check constant-current comparator circuit (Z1 and associated components).
Poor load regulation (Constant-current)	a. Incorrect reference or bias voltages. Refer to Table 5-2. b. Supply voltage limiting. Check constant-voltage comparator circuit (Z1 and associated components) and voltage clamp circuit, Q10. c. Leaky C19, C20. d. CR9 defective.
Oscillates (Constant-current or constant-voltage)	a. Adjustment of R30. Refer to paragraph 5-82. b. Faulty C5, C6, C19, C20, R30, R33. c. Open sensing lead (+S).
Instability (Constant-current/constant-voltage)	a. Incorrect reference or bias voltages; CR9 defective. Refer to Table 5-2. b. Noisy voltage or current controls (R10, R11, or R16, R17.) c. Integrated circuit Z1 defective. d. CR1, CR2, CR5, or CR6 leaky. e. R1, R2, R9, R12, R13, R18, R19, R20, C1 noisy or drifting.
Cannot reach maximum output	Q13 shorted.

Table 5-4. Feedback Loop Isolation

STEP	ACTION	RESPONSE	PROBABLE CAUSE
	NOTE: After each step, reset crowbar by turning supply off and then on.		
1	Check fuses or inspect LINE circuit breaker.	a. Fuse blown or breaker tripped.	a. Check rectifier, filter, and triac for short. Proceed to step 3.
		b. Fuses and breaker OK; output voltage high.	b. Proceed to step 2.
		c. Fuses and breaker OK; output voltage low.	c. Proceed to step 2.

Table 5-4. Feedback Loop Isolation (Continued)

STEP	ACTION	RESPONSE	PROBABLE CAUSE
2	Inspect OVERVOLTAGE lamp on front panel.	a. On. b. Off; output voltage high. c. Off; output voltage low.	a. Check setting of OVERVOLTAGE ADJUST (R109). Check CR57 for short. Proceed to step 3. b. Check OVERVOLTAGE ADJUST (R109). Check CR57 for open. Also check Q24 and Q25. Proceed to step 3. c. Check OVERVOLTAGE ADJUST (R109). Check CR57 for open. Also check Q24 and Q25. Proceed to step 3.
3	Isolate fault to series regulator or preregulator by proceeding as follows: (1) Open the gate lead of triac A2CR1 (TP53). (2) Observing correct polarity, connect a small dc power supply across input capacitor (C13 or C14). A 0-10V, 1A supply is sufficient. (3) Set external supply to ten volts. (4) Vary front panel voltage controls.	a. Output voltage normal (variable from 0 volts to about 9 volts). b. Output voltage high. Varying controls has little or no effect. c. Output voltage low. Varying controls has little or no effect.	a. Faulty preregulator. Disconnect external source and proceed to Table 5-7. b. High voltage condition in series regulator. Proceed to Table 5-5. Leave external source connected. c. Low voltage condition in series regulator loop. Proceed to Table 5-6. Leave external source connected.

Table 5-5. Series Regulator Troubleshooting, High Output Voltage

STEP	ACTION	RESPONSE	PROBABLE CAUSE
	Make these tests with external source connected as described in step 3 of Table 5-4.		
1	Check turn-off of driver and series regulator transistors Q3, Q6, (and Q7) by momentarily shorting rear panel terminal A4 to base of Q3 (TP45).	a. Output voltage remains high. b. Output voltage decreases.	a. Q6, Q7, CR11 or Q3 shorted. b. Proceed to step 2.
2	Check conduction of Q4 by momentarily shorting Q12 emitter to collector (TP74 to TP45).	a. Output voltage remains high. b. Output voltage decreases.	a. Q4 open. b. Proceed to step 3.
3	Check conduction of Q12 by momentarily connecting base (TP83) to collector (TP45).	a. Output voltage remains high. b. Output voltage decreases.	a. Q12 open. b. Proceed to step 4.
4	Check turn-off of Q5 by momentarily connecting base (TP84) to emitter (TP85).	a. Output voltage remains high. b. Output voltage decreases.	a. Q5 shorted. b. Proceed to step 5.

Table 5-5. Series Regulator Troubleshooting, High Output Voltage (Continued)

STEP	ACTION	RESPONSE	PROBABLE CAUSE
5	Check turn-off of Z1 by momentarily connecting a 10kΩ resistor between pin 10 (TP89) and +6.2V supply (TP25).	a. Output voltage remains high. b. Output voltage decreases.	a. CR1 open. Z1 defective. b. R5, R6, R10, or R11 open, strap between A1 and A2 open.

Table 5-6. Series Regulator Troubleshooting, Low Output Voltage

STEP	ACTION	RESPONSE	PROBABLE CAUSE
	Make these tests with external source connected as described in step 3 of Table 5-4.		
1	Check turn-off of Q4 by momentarily shorting base (TP69) to emitter (TP75).	a. Output voltage remains low. b. Output voltage rises.	a. Q4 shorted. Q3, Q6, (Q7) open. b. Proceed to step 2.
2	Check turn-off of Q12 by momentarily shorting base (TP83) to emitter (TP74).	a. Output voltage remains low. b. Output voltage rises.	a. Q12 shorted. b. Proceed to step 3.
3	Isolate fault to constant-voltage comparator or constant-current comparator by opening the cathode of CR4.	a. Output voltage rises. b. Output voltage remains low.	a. Z1 defective; strap between A6 and A7 open; R16, R17 shorted. b. Reconnect lead and proceed to step 4.
4	Check turn-on of Q5 by momentarily shorting base (TP84) to collector (TP83).	a. Output voltage remains low. b. Output voltage rises.	a. Q5 or CR8 open, Q11 shorted. b. Proceed to step 5.
5	Check turn-on of Z1 by momentarily connecting a 10kΩ resistor between pin 10 (TP89) and –6.2V supply (TP24).	a. Output voltage remains low. b. Output voltage rises.	a. Z1 defective. b. R10 or R11 shorted, strap between A2 and A3 open, R9 open, C1 shorted, CR20 shorted.

Table 5-7. Preregulator Troubleshooting (See Figure 4-4 for Waveforms)

STEP	ACTION	RESPONSE	PROBABLE CAUSE
1	Connect oscilloscope between TP59 (+) and TP81 (–).	a. Normal waveform. b. Little or no voltage.	a. Proceed to step 2. b. Defective Q18, Q19, or C18. Proceed to step 3.
2	Connect oscilloscope between TP53 (+) and TP55 (–).	a. Normal waveform. b. Little or no voltage. **WARNING**	a. Defective A2CR1, A2L1A/A2L1B, T1, A2C1, A2C3. b. Defective T3, CR40, R84. Proceed to step 3.
	To avoid a potentially lethal shock hazard, a differential oscilloscope must be used in making this measurement.		

Table 5-7. Preregulator Troubleshooting (See Figure 4-4 for Waveforms) (Continued)

STEP	ACTION	RESPONSE	PROBABLE CAUSE
3	Connect oscilloscope between TP73 (+) and TP81 (–).	a. Amplitude incorrect. b. Period incorrect.	a. Defective Q22, C15, C17, CR43, CR44, R78, R86, or R87. b. CR38 defective. Proceed to step 4.
4	Connect oscilloscope between TP64 (+) and TP67 (–).	Amplitude, dc reference, or period incorrect.	Defective CR28, CR33, CR36, CR37, CR38. Check R70.
5	Connect oscilloscope between TP67 (+) and TP81 (–).	Amplitude, dc reference, or period incorrect.	Defective CR27, CR31, R68, R69, C16.

Table 5-8. Checks and Adjustments Required After Semiconductor Replacement

REFERENCE	FUNCTION OR CIRCUIT	CHECK	ADJUST
Z1	Constant-voltage and constant-current differential amplifiers	Constant-voltage (CV) line and load regulation. Zero volt output. Constant-current (CC) line and load regulation. Zero current output.	R6 or R8 (or R124 if Option 020 or 040). R25 or R28 (or R128 if Option 021 or or 040). See para. 5-70 and 5-77).
Q3, Q4, Q12	Driver and error amplifiers.	CV/CC load regulation.	– –
Q5, Q11	Mixer amplifier.	CV/CC load regulation. CV transient response.	R30 (See para. 5-82).
Q6 (Q7)	Series regulator.	CV/CC load regulation.	– –
Q9, Q14, Q15, Q16	Reference regulator.	+12.4V reference voltage; constant voltage line regulation.	– –
Q10	Voltage clamp circuit.	CC load regulation.	– –
Q13	Short circuit protection.	Output current.	– –
Q18, Q19, Q22	Preregulator control.	Output voltage, ripple imbalance, and preregulator waveforms.	R75, R78 (See para. 5-84 and 5-86).
Q23, Q24, Q25	Crowbar.	Trip voltage, voltage across series regulator when tripped.	R108, R109 (See para. 5-88 and 5-90).
CR1, CR2	Limiting diodes.	CV load regulation, stability.	– –
CR3 – CR5	OR gate and limiting diode.	CV/CC load regulation.	– –

Table 5-8. Checks and Adjustments Required After Semiconductor Replacement (Continued)

REFERENCE	FUNCTION OR CIRCUIT	CHECK	ADJUST
CR6, CR8, CR46	Temperature stabilizing diodes.	Temperature coefficient.	– –
CR7, CR20	Reference regulator.	+12.4 and +6.2 reference voltages.	– –
CR9, CR56 – CR60	Crowbar.	Trip voltage, voltage across series regulator when crowbar is tripped, supply stability.	R108, R109. (See para. 5-88 and 5-90).
CR10, 12 – 14, CR21 – 24, 27, CR28, 31, 33	Rectifier diodes.	Voltage across appropriate filter capacitor.	– –
CR15	Bias supply.	+12V unregulated bias voltage.	– –
CR11, CR34	Reverse voltage protection.	Output voltage.	– –
CR30, CR32	Voltage clamp circuit.	CC load regulation.	– –
CR36 – 38, 40 CR43, 44, 51 CR52	Preregulator control.	Output voltage, ripple imbalance, and preregulator waveforms.	R75, R78. (See para. 5-84 and 5-86).
CR45, 47, 50	Turn-on circuit.	Preregulator control turn-on delay.	– –
A2CR1	Preregulator.	Output voltage.	R75 (See para. 5-86).
VR1, VR2	Reference supply.	+6.2V and –6.2V reference voltages.	– –
VR3	Voltage clamp circuit.	CC load regulation.	– –
VR4	Mixer amplifier stabilization diode.	CV transient response.	R30 (See para. 5-82).
VR5	Crowbar.	Trip voltage.	R108, R109 (See para. 5-88 and 5-90).
VR6, VR7	Bias voltage supply.	–2.4V and –4.8V bias voltages.	– –

5-60 REPAIR AND REPLACEMENT

5-61 Section VI of this manual contains a list of replaceable parts. If the part to be replaced does not have a standard manufacturer's part number, it is a special part and must be otbained directly from Hewlett-Packard. After replacing a semiconductor device, refer to Table 5-8 for the checks and adjustments that may be necessary.

5-62 ADJUSTMENT AND CALIBRATION

5-63 Adjustment and calibration may be required after performance testing, troubleshooting, or repair and replacement. Perform only those adjustments that affect the operation of the faulty circuit.

5-64 Meter Zero Adjustment

5-65 The meter pointer must rest on the zero calibration mark on the meter scale when the instrument is at normal operating temperature, resting in its normal operating position, and turned off. To zero the meter proceed as follows:

a. Turn on instrument and allow it to come up to normal operating temperature (about 30 minutes).

b. Turn instrument off and wait two minutes for power supply capacitors to discharge completely.

c. Insert pointed object (pen point or awl) into small indentation near top of round black plastic disc located directly below meter face.

d. Rotate plastic disc clockwise until meter reads zero, then rotate counterclockwise slightly in order to free adjustment screw from meter suspension. Pointer should not move during latter part of adjustment.

5-66 Voltmeter Calibration

5-67 To calibrate the voltmeter, proceed as follows:

a. Connect digital voltmeter across plus and minus output terminals of supply, observing correct polarity.

b. Turn on supply and adjust VOLTAGE controls until digital voltmeter reads exactly the maximum rated output voltage.

c. Adjust R56 until front panel voltmeter also indicates exactly the maximum rated output voltage.

5-68 Ammeter Calibration

5-69 To calibrate the ammeter, proceed as follows:

a. Connect test setup shown in Figure 5-7.

b. Turn VOLTAGE controls fully clockwise.

c. Turn on supply and adjust CURRENT controls until digital voltmeter reads 500mV.

d. Adjust R63 until front panel ammeter indicates exactly maximum rated output current.

5-70 Constant-Voltage Programming Calibration

5-71 Zero Output Voltage, Standard Instrument. To calibrate the zero voltage programming accuracy of a standard instrument, proceed as follows:

a. Connect digital voltmeter between the +S and –S terminals, observing correct polarity.

b. If unit is to be used in local programming mode, turn VOLTAGE controls fully counterclockwise. If unit is to be used in remote programming mode, connect remote programming setup (Figure 3-4 or 3-5) and adjust remote resistance or voltage to zero.

c. Rotate CURRENT controls fully clockwise and turn on supply.

d. Observe digital voltmeter reading. If reading is more positive than 0 volts, shunt resistor R6 with decade resistance box.

e. Adjust decade resistance until digital voltmeter reads exactly zero, then shunt R6 with fixed, metal film, ±1%, 1/4 or 1/8 watt resistor of value equal to that of decade box.

f. If reading of step (d) is more negative than 0 volts, shunt resistor R8 with decade resistance box.

g. Adjust decade resistance until digital voltmeter reads exactly zero, then shunt R8 with fixed, metal film, ±1%, 1/4 or 1/8 watt resistor of value equal to that of decade box.

NOTE

The internal temperature rise of the power supply has an effect on the accuracy of the programming coefficient. For example, an internal temperature rise of 15°C (typical of the temperature difference between no-load and full-load operation) causes the supply output to change by 0.15%. Since the factory calibration procedure for instruments equipped with Option 020 or 040 sets the voltage programming coefficient to within 0.1%, the resulting accuracy specification including the effect of the 15°C temperature rise would be 0.25%.

5-72 Zero Output Voltage, Option 020. To calibrate the zero voltage programming accuracy of an instrument equipped with Option 020, proceed as follows:

a. Perform steps (a) through (c) of paragraph 5-71.

b. Adjust potentiometer R124 (labeled "VOLTAGE ZERO" and accessible through hole in rear panel) until digital voltmeter reading is zero volts ±1mV.

5-73 Zero Output Voltage, Option 040. To calibrate the zero voltage programming accuracy of an instrument equipped with Option 040, proceed as follows:

a. Connect supply for remote resistance programming as shown in Figure 3-4 and adjust programming resistor

for 10 ohms ±1%.

b. Connect a digital voltmeter between the +S and –S terminals, observing correct polarity.

c. Rotate CURRENT controls fully clockwise and turn on supply.

d. Adjust potentiometer R124 (labeled "VOLTAGE ZERO" and accessible through hole in rear panel) until digital voltmeter reads zero volts ±1mV.

5-74 CV Programming Accuracy, Standard Instrument. To calibrate the constant-voltage programming current of a standard instrument, proceed as follows:

a. Connect a ±0.1% 1/4 watt resistor of the value shown below between terminals –S and A2 on the rear barrier strip and disconnect jumper between A1 and A2.

6256B	2kΩ
6263B, 6264B	4kΩ
6265B, 6266B, 6267B	8kΩ
6271B, 6274B	18kΩ

b. Connect a digital voltmeter between the +S and –S terminals.

c. Connect decade resistance in place of R13.

d. Rotate CURRENT controls fully clockwise and turn on supply.

e. Adjust decade resistance box until digital voltmeter indicates full rated output voltage ±0.1%.

f. Replace decade resistance with ±5%, 1/2 watt resistor of appropriate value in R13 position.

5-75 CV Programming Accuracy, Option 020. To calibrate the constant-voltage programming current of an instrument equipped with Option 020, proceed as follows:

a. Perform steps (a) and (b) of paragraph 5-74.

b. Rotate CURRENT controls fully clockwise and turn on supply.

c. Adjust potentiometer R122 (labeled "VOLTAGE PROG" and accessible through hole in rear panel) until digital voltmeter indicates full rated output voltage ±0.1%.

5-76 CV Programming Accuracy, Option 040. To calibrate the constant-voltage programming current of an instrument equipped with Option 040, proceed as follows:

a. Connect a ±0.1% 1/4 watt resistor of the value shown below between terminals –S and A2 on rear barrier strip and disconnect jumper between A1 and A2.

6256B	2010Ω
6263B, 6264B	4010Ω
6265B, 6266B, 6267B	8010Ω
6271B, 6274B	18010Ω

b. Connect a digital voltmeter between the +S and –S terminals.

c. Rotate CURRENT controls fully clockwise and turn on supply.

d. Adjust potentiometer R122 (labeled "VOLTAGE PROG" and accessible through hole in rear panel) until digital voltmeter indicates full rated output voltage ±0.1%.

5-77 Constant-Current Programming Calibration

5-78 Zero Output Current, Standard Instrument. To calibrate the zero current programming accuracy of a standard instrument, proceed as follows:

a. Connect test setup shown in Figure 5-7, except substitute a short circuit for load resistor R_L.

b. If unit is to be used in local programming mode, turn CURRENT controls fully counterclockwise. If unit is to be used in remote programming mode, connect remote programming setup (Figure 3-6 or 3-7) and adjust remote resistance or voltage to zero.

c. Rotate VOLTAGE controls fully clockwise and turn on supply.

d. Observe digital voltmeter reading. If reading is more positive than 0 volts, shunt resistor R25 with decade resistance box.

e. Adjust decade resistance until digital voltmeter reads exactly zero, then shunt R25 with fixed, metal film, ±1%, 1/4 or 1/8 watt resistor of value equal to that of decade resistance.

f. If reading of step (d) is more negative than 0 volts, shunt resistor R28 with decade resistance box.

g. Adjust decade resistance until digital voltmeter reads exactly zero, then shunt R28 with fixed, metal film, ±1% 1/4 or 1/8 watt resistor of value equal to that of decade box.

5-79 Zero Output Current, Option 021 or 040. To calibrate the zero current programming accuracy of an instrument equipped with Option 021 or 040, proceed as follows:

a. Perform steps (a) through (c) of paragraph 5-78.

b. Adjust potentiometer R128 (labeled "CURRENT ZERO" and accessible through hole in rear panel) until digital voltmeter reading is zero volts ±2mV.

5-80 CC Programming Accuracy, Standard Instrument. To calibrate the constant-current programming current of a standard instrument, proceed as follows:

a. Connect test setup shown in Figure 5-7, except substitute a short circuit for load resistor R_L.

b. Disconnect jumper between A5 and A6 on rear barrier strip.

c. Connect a ±0.1%, 1/4 watt resistor of the value shown below between terminals A4 and A6 on rear barrier strip.

6256B, 6264B	200Ω
6263B, 6266B	1000Ω
6267B, 6274B	1000Ω
6265B, 6271B	900Ω

d. Connect decade resistance box in place of R19.

e. Rotate VOLTAGE controls fully clockwise and turn on supply.

f. Adjust decade resistance until digital voltmeter indicates 500 ±10mV.

g. Replace decade resistance with ±5%, 1/2 watt

resistor of appropriate value in R19 position.

5-81 CC Programming Accuracy, Option 021 or 040. To calibrate the constant-current programming current of an instrument equipped with Option 021 or 040, proceed as follows:

a. Perform steps (a) through (c) of paragraph 5-80.

b. Rotate VOLTAGE controls fully clockwise and turn on supply.

c. Adjust potentiometer R126 (labeled "CURRENT PROG" and accessible through hole in rear panel) until digital voltmeter indicates 500 ±10mV.

5-82 Load Transient Recovery Time Adjustment

5-83 To adjust the transient response, proceed as follows:

a. Connect test setup shown in Figure 5-4.

b. Repeat steps (a) through (k) as outlined in paragraph 5-30.

c. Adjust R30 (transient recovery) until transient response is within specification as shown in Figure 5-5.

5-84 Ripple Balance Adjustment

5-85 This procedure ensures balanced triac operation by ensuring that its conduction time is within 25% of being equal in both directions. To check for imbalance, proceed as follows:

a. Connect load resistor specified in Figure 5-1 across rear output terminals of supply.

b. Connect variable autotransformer between input power source and power supply input and adjust it for a 115Vac input to the supply.

c. Connect ac-coupled oscilloscope across series regulator (between TP47 and TP81).

d. Turn CURRENT controls fully clockwise, turn on supply, and adjust VOLTAGE controls for maximum rated output voltage.

e. Adjust oscilloscope to observe 120Hz sawtooth waveform. Peak amplitudes of adjacent sawtooth peaks should be within 25% of each other.

f. If amplitude difference is greater than 25%, turn off supply and replace R78 with decade resistance.

g. Turn on supply and adjust decade resistance to reduce imbalance to within 25%.

h. Vary input line voltage from 104 to 127Vac and insure that excessive imbalance does not exist anywhere within this range.

5-86 Preregulator Tracking Adjustment

5-87 To adjust the voltage drop across the series regulator, proceed as follows:

a. Connect load resistor specified in Figure 5-1 across rear output terminals of supply.

b. Connect variable autotransformer between input power source and power supply input and adjust it for a 115Vac input to the supply.

c. Connect dc voltmeter across series regulator (between TP47 and TP81).

d. Turn CURRENT controls fully clockwise.

e. To check voltage drop across regulator at low output voltage, short circuit the load resistor and adjust VOLTAGE controls for maximum rated output current on front panel ammeter.

f. Adjust R75 (RAMP ADJ.) until voltmeter reads 3.7Vdc.

g. To check the voltage drop at high output voltage, remove short circuit from across load resistor and adjust VOLTAGE controls for maximum rated output current. Voltmeter reading should again be 3.7Vdc.

h. Vary input line voltage from 104 to 127Vac. Voltmeter reading should vary between 3.1 and 4.3Vdc. If reading exceeds this range, proceed to step (i).

i. Replace R76 with decade box. Vary input line voltage between 104 and 127Vac and adjust decade box until voltmeter reading varies between 3.1 and 4.3Vdc. Replace decade box with equivalent resistor.

5-88 Crowbar Trip Voltage Adjustment

5-89 To adjust the voltage at which the crowbar fires, proceed as follows:

a. Turn front panel OVERVOLTAGE ADJUST potentiometer R109 fully clockwise.

b. Turn on supply.

c. Set output voltage to desired trip voltage.

d. Turn R109 slowly counterclockwise until the crowbar fires (amber OVERVOLTAGE lamp lights and voltmeter indication falls to zero).

e. Turn off supply and turn down output voltage controls.

f. Turn on supply and set desired output voltage.

NOTE

It is recommended that the crowbar trip voltage be set higher than the normal output voltage by no less than 7% of the desired output voltage plus one volt in order to avoid false tripping of the crowbar.

5-90 Maximum Crowbar Trip Voltage Adjustment

5-91 To adjust the maximum voltage at which the crowbar fires, proceed as follows:

a. Rotate R109 (OVERVOLTAGE ADJUST) and CURRENT controls fully clockwise.

b. Connect decade resistance box in place of R108.

c. Turn on supply and adjust VOLTAGE controls for output voltage as follows:

6256B	12Vdc
6263B, 6264B	23Vdc
6265B, 6266B, 6267B	45Vdc
6271B, 6274B	66Vdc

d. Adjust decade resistance box until crowbar fires.

e. Replace decade resistance with appropriate value resistor in R108 position. Maximum crowbar trip voltage is now set at voltage given in step (c).

5-92 Disabling The Crowbar

5-93 To disable the crowbar completely, disconnect the cathode of CR57. This can be easily accomplished by removing the jumper connecting the cathode to the printed circuit board. This jumper is accessible from the component (top) side of the board.

SECTION VI
REPLACEABLE PARTS

6-1 INTRODUCTION

6-2 This section contains information for ordering replacement parts. Table 6-3 lists parts in alpha-numeric order by reference designators and provides the following information:

a. Reference Designators. Refer to Table 6-1.

b. Description. Refer to Table 6-2 for abbreviations.

c. Manufacturer's Part Number or Type.

d. Manufacturer's Federal Supply Code Number. Refer to Table 6-3 for manufacturer's name and address.

e. Hewlett-Packard Part Number.

f. Parts not identified by a reference designator are listed at the end of Table 6-3 under Mechanical and/or Miscellaneous. The former consists of parts belonging to and grouped by individual assemblies; the latter consists of all parts not immediately associated with an assembly.

6-3 ORDERING INFORMATION

6-4 To order a replacement part, address order or inquiry to your local Hewlett-Packard sales office (see lists at rear of this manual for addresses). Specify the following information for each part: Model, complete serial number, and any Option or special modification (J) numbers of the instrument; Hewlett-Packard part number; circuit reference designator; and description. To order a part not listed in Table 6-3, give a complete description of the part, its function, and its location.

Table 6-1. Reference Designators

A	= assembly	E	= miscellaneous electronic part
B	= blower (fan)	F	= fuse
C	= capacitor	J	= jack, jumper
CB	= circuit breaker	K	= relay
CR	= diode	L	= inductor
DS	= device, signaling (lamp)	M	= meter

Table 6-1. Reference Designators (Continued)

P	= plug	V	= vacuum tube, neon bulb, photocell, etc.
Q	= transistor	VR	= zener diode
R	= resistor	X	= socket
S	= switch	Z	= integrated circuit or network
T	= transformer		
TB	= terminal block		
TS	= thermal switch		

Table 6-2. Description Abbreviations

A	= ampere	mod.	= modular or modified
ac	= alternating current	mtg	= mounting
assy.	= assembly	n	= nano = 10^{-9}
bd	= board	NC	= normally closed
bkt	= bracket	NO	= normally open
^{o}C	= degree Centigrade	NP	= nickel-plated
cd	= card	Ω	= ohm
coef	= coefficient	obd	= order by description
comp	= composition	OD	= outside diameter
CRT	= cathode-ray tube	p	= pico = 10^{-12}
CT	= center-tapped	P.C.	= printed circuit
dc	= direct current	pot.	= potentiometer
DPDT	= double pole, double throw	p-p	= peak-to-peak
DPST	= double pole, single throw	ppm	= parts per million
elect	= electrolytic	pvr	= peak reverse voltage
encap	= encapsulated	rect	= rectifier
F	= farad	rms	= root mean square
^{o}F	= degree Farenheit	Si	= silicon
fxd	= fixed	SPDT	= single pole, double throw
Ge	= germanium	SPST	= single pole, single throw
H	= Henry	SS	= small signal
Hz	= Hertz	T	= slow-blow
IC	= integrated circuit	tan.	= tantulum
ID	= inside diameter	Ti	= titanium
incnd	= incandescent	V	= volt
k	= kilo = 10^{3}	var	= variable
m	= milli = 10^{-3}	ww	= wirewound
M	= mega = 10^{6}	W	= Watt
μ	= micro = 10^{-6}		
met.	= metal		
mfr	= manufacturer		

Table 6-3. Code List of Manufacturers

CODE	MANUFACTURER	ADDRESS
00629	EBY Sales Co., Inc.	Jamaica, N.Y.
00656	Aerovox Corp.	New Bedford, Mass.
00853	Sangamo Electric Co. S. Carolina Div.	Pickens, S.C.
01121	Allen Bradley Co.	Milwaukee, Wis.
01255	Litton Ind.	Beverly Hills, Calif.
01281	TRW Semiconductors, Inc.	Lawndale, Calif.
01295	Texas Instruments, Inc.	Dallas, Texas
01686	RCL Electronics, Inc.	Manchester, N.H.
01930	Amerock Corp.	Rockford, Ill.
02107	Sparta Mfg. Co.	Dover, Ohio
02114	Ferroxcube Corp.	Saugerties, N.Y.
02606	Fenwal Laboratories	Morton Grove, Ill.
02660	Amphenol Corp.	Broadview, Ill.
02735	Radio Corp. of America, Solid State and Receiving Tube Div.	Somerville, N.J.
03508	G.E. Semiconductor Products Dept.	Syracuse, N.Y.
03797	Eldema Corp.	Compton, Calif.
03877	Transitron Electronic Corp.	Wakefield, Mass.
03888	Pyrofilm Resistor Co., Inc.	Cedar Knolls, N.J.
04009	Arrow, Hart and Hegeman Electric Co.	Hartford, Conn.
04072	ADC Electronics, Inc.	Harbor City, Calif.
04213	Caddell & Burns Mfg. Co. Inc.	Mineola, N.Y.
04404	*Hewlett-Packard Co. Palo Alto Div.	Palo Alto, Calif.
04713	Motorola Semiconductor Prod. Inc.	Phoenix, Arizona
05277	Westinghouse Electric Corp. Semiconductor Dept.	Youngwood, Pa.
05347	Ultronix, Inc.	Grand Junction, Colo.
05820	Wakefield Engr. Inc.	Wakefield, Mass.
06001	General Elect. Co. Electronic Capacitor & Battery Dept.	Irmo, S.C.
06004	Bassik Div. Stewart-Warner Corp.	Bridgeport, Conn.
06486	IRC Div. of TRW Inc. Semiconductor Plant	Lynn, Mass.
06540	Amatom Electronic Hardware Co. Inc.	New Rochelle, N.Y.
06555	Beede Electrical Instrument Co.	Penacook, N.H.
06666	General Devices Co.	Indianapolis, Ind.
06751	Semoor Div. Components, Inc.	Phoenix, Arizona
06776	Robinson Nugent, Inc.	New Albany, N.Y.
06812	Torrington Mfg. Co.	Van Nuys, Calif.
07137	Transistor Electronics Corp.	Minneapolis, Minn.
07138	Westinghouse Electric Corp.	Elmira, N.Y.
07263	Fairchild Camera and Instrument	Mountain View, Calif.
07387	Birtcher Corp., The	Los Angeles, Calif.
07397	Sylvania Electric Prod. Inc.	Mountainview, Calif.
07716	IRC Div. of TRW Inc.	Burlington, Iowa
07910	Continental Device Corp.	Hawthorne, Calif.
07933	Raytheon Co. Components Div.	Mountain View, Calif.
08484	Breeze Corporations, Inc.	Union, N.J.
08530	Reliance Mica Corp.	Brooklyn, N.Y.
08717	Sloan Company, The	Sun Valley, Calif.
08730	Vemaline Products Co. Inc.	Wyckoff, N.J.
08806	General Elect. Co. Minature Lamp Dept.	Cleveland, Ohio
08863	Nylomatic Corp.	Norrisville, Pa.
08919	RCH Supply Co.	Vernon, Calif.
09021	Airco Speer Electronic Components	Bradford, Pa.
09182	*Hewlett-Packard Co. New Jersey Div.	Rockaway, N.J.
09213	General Elect. Co. Semiconductor Prod. Dept.	Buffalo, N.Y.
09214	General Elect. Co. Semiconductor Prod. Dept.	Auburn, N.Y.
09353	C & K Components Inc.	Newton, Mass.
09922	Burndy Corp.	Norwalk, Conn.
11115	Wagner Electric Corp. Tung-Sol Div.	Bloomfield, N.J.
11236	CTS of Berne, Inc.	Berne, Ind.
11237	Chicago Telephone of Cal. Inc.	So. Pasadena, Calif.
11502	IRC Div. of TRW Inc.	Boone, N.C.
11711	General Instrument Corp.	Newark, N.J.
12136	Philadelphia Handle Co.	Camden, N.J.
12615	U.S. Terminals, Inc.	Cincinnati, Ohio
12617	Hamlin Inc.	Lake Mills, Wisconsin
12697	Clarostat Mfg. Co. Inc.	Dover, N.H.
13103	Thermalloy Co.	Dallas, Texas
14493	*Hewlett-Packard Co.	Loveland, Colo.
14655	Cornell-Dubilier Electronics Div. Federal Pacific Electric Co.	Newark, N.J.
14936	General Instrument Corp. Semiconductor Prod. Group	Hicksville, N.Y.
15801	Fenwal Elect.	Framingham, Mass.
16299	Corning Glass Works	Raleigh, N.C.

*Use Code 28480 assigned to Hewlett-Packard Co., Palo Alto, California

Table 6-3. Code List of Manufacturers

CODE	MANUFACTURER	ADDRESS
16758	Delco Radio Div. of General Motors Corp.	Kokomo, Ind.
17545	Atlantic Semiconductors, Inc.	Asbury Park, N.J.
17803	Fairchild Camera and Instrument Corp.	Mountain View, Calif.
17870	Daven Div. Thomas A. Edison Industries McGraw-Edison Co.	Orange, N.J.
18324	Signetics Corp.	Sunnyvale, Calif.
19315	Bendix Corp. The Navigation and Control Div.	Teterboro, N.J.
19701	Electra/Midland Corp.	Mineral Wells, Texas
21520	Fansteel Metallurgical Corp.	No. Chicago, Ill.
22229	Union Carbide Corp. Electronics Div.	Mountain View, Calif.
22753	UID Electronics Corp.	Hollywood, Fla.
23936	Pamotor, Inc.	Pampa, Texas
24446	General Electric Co.	Schenectady, N.Y.
24455	General Electric Co.	Nela Park, Cleveland, Ohio
24655	General Radio Co.	West Concord, Mass.
24681	LTV Electrosystems Inc. Memcor/Components Operations	Huntington, Ind.
26982	Dynacool Mfg. Co. Inc.	Saugerties, N.Y.
27014	National Semiconductor Corp.	Santa Clara, Calif.
28480	Hewlett-Packard Co.	Palo Alto, Calif.
28520	Heyman Mfg. Co.	Kenilworth, N.J.
28875	IMC Magnetics Corp.	Rochester, N.H.
31514	SAE Advance Packaging, Inc.	Santa Ana, Calif.
31827	Budwig Mfg. Co.	Ramona, Calif.
33173	G.E. Co. Tube Dept.	Owensboro, Ky.
35434	Lectrohm, Inc.	Chicago, Ill.
37942	P.R. Mallory & Co.	Indianapolis, Ind.
42190	Muter Co.	Chicago, Ill.
43334	New Departure-Hyatt Bearings Div. General Motors Corp.	Sandusky, Ohio
44655	Ohmite Manufacturing Co.	Skokie, Ill.
46384	Penn Engr. and Mfg. Corp.	Doylestown, Pa.
47904	Polaroid Corp.	Cambridge, Mass.
49956	Raytheon Co.	Lexington, Mass.
55026	Simpson Electric Co. Div. of American Gage and Machine Co.	Chicago, Ill.
56289	Sprague Electric Co.	North Adams, Mass.
58474	Superior Electric Co.	Bristol, Conn.
58849	Syntron Div. of FMC Corp.	Homer City, Pa.
59730	Thomas and Betts Co.	Philadelphia, Pa.
61637	Union Carbide Corp.	New York, N.Y.
63743	Ward Leonard Electric Co.	Mt. Vernon, N.Y.
70563	Amperite Co. Inc.	Union City, N.J.
70901	Beemer Engrg Co.	Fort Washington, Pa.
70903	Belden Corp.	Chicago, Ill.
71218	Bud Radio, Inc.	Willoughby, Ohio
71279	Cambridge Thermionic Corp.	Cambridge, Mass.
71400	Bussmann Mfg. Div.of McGraw & Edison Co.	St. Louis, Mo.
71450	CTS Corp.	Elkhart, Ind.
71468	I.T.T. Cannon Electric Inc.	Los Angeles, Calif.
71590	Globe-Union Inc.	Milwaukee, Wis.
71700	General Cable Corp. Cornish Wire Co. Div.	Williamstown, Mass.
71707	Coto Coil Co. Inc.	Providence, R.I.
71744	Chicago Miniature Lamp Works	Chicago, Ill.
71785	Cinch Mfg. Co. and Howard B. Jones Div.	Chicago, Ill.
71984	Dow Corning Corp.	Midland, Mich.
72136	Electro Motive Mfg. Co. Inc.	Willimantic, Conn.
72619	Dialight Corp.	Brooklyn, N.Y.
72699	General Instrument Corp.	Newark, N.J.
72765	Drake Mfg. Co.	Harwood Heights, Ill.
72962	Elastic Stop Nut Div. of Amerace Esna Corp.	Union, N.J.
72982	Erie Technological Products	Erie, Pa.
73096	Hart Mfg. Co.	Hartford, Conn.
73138	Beckman Instruments	Fullerton, Calif.
73168	Fenwal, Inc.	Ashland, Mass.
73293	Hughes Aircraft Co. Electron Dynamics Div.	Torrance, Calif.
73445	Amperex Electronic	Hicksville, N.Y.
73506	Bradley Semiconductor Corp.	New Haven, Conn.
73559	Carling Electric, Inc.	Hartford, Conn.
73734	Federal Screw Products, Inc.	Chicago, Ill.
74193	Heinemann Electric Co.	Trenton, N.J.
74545	Hubbell Harvey Inc.	Bridgeport, Conn.
74868	Amphenol Corp. Amphenol RF Div.	Danbury, Conn.
74970	E.F. Johnson Co.	Waseca, Minn.

Table 6-3. Code List of Manufacturers

CODE	MANUFACTURER	ADDRESS
75042	IRC Div. of TRW, Inc.	Philadelphia, Pa.
75183	*Howard B. Jones Div. of Cinch Mfg. Corp.	New York, N.Y.
75376	Kurz and Kasch, Inc.	Dayton, Ohio
75382	Kilka Electric Corp.	Mt. Vernon, N.Y.
75915	Littlefuse, Inc.	Des Plaines, Ill.
76381	Minnesota Mining and Mfg. Co.	St. Paul, Minn.
76385	Minor Rubber Co. Inc.	Bloomfield, N.J.
76487	James Millen Mfg. Co. Inc.	Malden, Mass.
76493	J.W. Miller Co.	Compton, Calif.
76530	Cinch	City of Industry, Calif.
76854	Oak Mfg. Co. Div. of Oak Electro/ Netics Corp.	Crystal Lake, Ill.
77068	Bendix Corp., Electrodynamics Div.	No. Hollywood, Calif.
77122	Palnut Co.	Mountainside, N.J.
77147	Patton-MacGuyer Co.	Providence, R.I.
77221	Phaostron Instrument and Electronic Co.	South Pasadena, Calif.
77252	Philadelphia Steel and Wire Corp.	Philadelphia, Pa.
77342	American Machine and Foundry Co.	Princeton, Ind.
77630	TRW Electronic Components Div.	Camden, N.J.
77764	Resistance Products Co.	Harrisburg, Pa.
78189	Illinois Tool Works Inc.	Elgin, Ill.
78452	Everlook Chicago, Inc.	Chicago, Ill.
78488	Stackpole Carbon Co.	St. Marys, Pa.
78526	Stanwyck Winding Div. San Fernando Electric Mfg. Co. Inc.	Newburgh, N.Y.
78553	Tinnerman Products, Inc.	Cleveland, Ohio
78584	Stewart Stamping Corp.	Yonkers, N.Y.
79136	Waldes Kohinoor, Inc.	L.I.C., N.Y.
79307	Whitehead Metals Inc.	New York, N.Y.
79727	Continental-Wirt Electronics Corp.	Philadelphia, Pa.
79963	Zierick Mfg. Co.	Mt. Kisco, N.Y.
80031	Mepco	Morristown, N.J.
80294	Bourns, Inc.	Riverside, Calif.
81042	Howard Industries	Racine, Wisc.
81073	Grayhill, Inc.	La Grange, Ill.
81483	International Rectifier	El Segundo, Calif.
81751	Columbus Electronics	Yonkers, N.Y.
82099	Goodyear Sundries & Mechanical Co. Inc.	New York, N.Y.
82142	Airco Speer Electronic Components	Du Bois, Pa.
82219	Sylvania Electric Products Inc.	Emporium, Pa.
82389	Switchcraft, Inc.	Chicago, Ill.
82647	Metals and Controls Inc.	Attleboro, Mass.
82866	Research Products Corp.	Madison, Wisc.
82877	Rotron Inc.	Woodstock, N.Y.
82893	Vector Electronic Co.	Glendale, Calif.
83058	Carr Fastener Co.	Cambridge, Mass.
83186	Victory Engineering	Springfield, N.J.
83298	Bendix Corp.	Eatontown, N.J.
83330	Herman H. Smith, Inc.	Brooklyn, N.Y.
83385	Central Screw Co.	Chicago, Ill.
83501	Gavitt Wire and Cable	Brookfield, Mass.
83508	Grant Pulley and Hardware Co.	West Nyack, N.Y.
83594	Burroughs Corp.	Plainfield, N.J.
83835	U.S. Radium Corp.	Morristown, N.J.
83877	Yardeny Laboratories	New York, N.Y.
84171	Arco Electronics, Inc.	Great Neck, N.Y.
84411	TRW Capacitor Div.	Ogallala, Neb.
86684	RCA Corp.	Harrison, N.J.
86838	Rummel Fibre Co.	Newark, N.J.
87034	Marco & Oak Industries	Anaheim, Calif.
87216	Philco Corp.	Lansdale, Pa.
87585	Stockwell Rubber Co.	Philadelphia, Pa.
87929	Tower-Olschan Corp.	Bridgeport, Conn.
88140	Cutler-Hammer Inc.	Lincoln, Ill.
88245	Litton Precision Products Inc, USECO	Van Nuys, Calif.
90634	Gulton Industries Inc.	Metuchen, N.J.
90763	United-Car Inc.	Chicago, Ill.
91345	Miller Dial and Nameplate Co.	El Monte, Calif.
91418	Radio Materials Co.	Chicago, Ill.
91506	Augat, Inc.	Attleboro, Mass.
91637	Dale Electronics, Inc.	Columbus, Neb.
91662	Elco Corp.	Willow Grove, Pa.
91929	Honeywell Inc.	Freeport, Ill.
92825	Whitso, Inc.	Schiller Pk., Ill.
93332	Sylvania Electric Prod.	Woburn, Mass.
93410	Essex Wire Corp.	Mansfield, Ohio
94144	Raytheon Co.	Quincy, Mass.
94154	Wagner Electric Corp.	Livingston, N.J.
94222	Southco Inc.	Lester, Pa.
95263	Leecraft Mfg. Co. Inc.	L.I.C., N.Y.
95354	Methode Mfg. Co.	Rolling Meadows, Ill.
95712	Bendix Corp.	Franklin, Ind.
95987	Weckesser Co. Inc.	Chicago, Ill.
96791	Amphenol Corp.	Janesville, Wis.
97464	Industrial Retaining Ring Co.	Irvington, N.J.
97702	IMC Magnetics Corp.	Westbury, N.Y.
98291	Sealectro Corp.	Mamaroneck, N.Y.
98410	ETC Inc.	Cleveland, Ohio
98978	International Electronic Research Corp.	Burbank, Calif.
99934	Renbrandt, Inc.	Boston, Mass.

*Use Code 71785 assigned to Cinch Mfg. Co., Chicago, Ill.

Table 6-4. Replaceable Parts

REF. DESIG. (AND MODELS)	DESCRIPTION	MFG. PART NUMBER	MFG. CODE	HP PART NUMBER
	A1 Main PC Board (See Note 1)			
C1				
6256B,-63B,-64B,-65B, -66B, -67B	fxd, elect. 5μF 50V	30D505G050BB2	56289	0180-0301
6271B,-74B	fxd, elect. 5μF 65V	D33689-DSM	56289	0180-1836
C3	fxd, polyester 0.1μF 200V	192P10492	56289	0160-0168
C5				
6256B,-63B,-64B,-65B, -66B,-67B,-71B	fxd, polyester 1000pF 200V	192P10292	56289	0160-0153
6274B	fxd, polyester 2200pF 200V	292P22292	56289	0160-0154
C6, 7	fxd, polyester .01μF 200V	192P10392	56289	0160-0161
C9	fxd, elect. 4.7μF 35V	150D475X9035B2	56289	0180-0100
C10	fxd, elect. 100μF 50V		28480	0180-1852
C11	fxd, cer. .05μF 500V	33617A	56289	0150-0052
C12	fxd, elect. 325μF 35V	D34656-DEE	56289	0180-0332
C15	fxd, elect. 1μF 35V	150D105X9035A2	56289	0180-0291
C16,17	fxd, elect. 5μF 50V	30D505G050BB2	56289	0180-0301
C18	fxd, polyester 0.22μF 80V	192P2249R8	56289	0160-2453
C19				
6263B	fxd, elect. 22μF 35V	150D226X0035R2	56289	0180-0160
6265B,-66B	fxd, elect. 15μF 50V	150D156X0050R2	56289	0180-1834
6271B	fxd, elect. 10μF 100V	30D106G100DC2	56289	0180-0091
C22	fxd, elect. 20μF 50V	30D206G050C02	56289	0180-0049
C27				
6256B,-64B,-67B,-74B	fxd, cer. 0.47μF 25V	5C11B7-CML	56289	0160-0174
C28				
6263B,-65B,-66B,-71B	fxd, cer. .01μF 500V	811-000-Y5U-0-103Z	72982	0150-0081
C29				
6263B,-65B,-66B,-71B	fxd, polyester 0.1μF 600V	6630W10496W	84411	0160-0710
C33	fxd, cer. 0.47μF 25V	5C11B7-CML	56289	0160-0174
C34	fxd, polyester 4700pF 200V	292P47292	56289	0160-0157
CR1-7	diode, Si. 180V 200mA	1N485		1901-0033
CR8	diode, Si. 3-junction	STB 523	03508	1901-0460
CR9	diode, Si. 180V 200mA	1N485		1901-0033
CR10	diode, Si. 200V 1A	1N5059		1901-0327
CR11				
6265B,-71B	diode, Si. 200V 1.5A	1N4999		1901-0416
CR12-15	diode, Si. 200V 1A	1N5059		1901-0327
CR16,20	diode, Si. 180V 200mA	1N485		1901-0033
CR21-24				
6265B,-71B	diode, Si. 200V 1.5A	1N4999		1901-0416
CR27,28,30-33	diode, Si. 180V 200mA	1N485		1901-0033
CR34				
6265B,-71B	diode, Si. 200V 1.5A	1N4999		1901-0416
CR36	diode, Si. 3-junction	STB 523	03508	1901-0460
CR37,38,43-47,50	diode, Si. 180V 200mA	1N485		1901-0033
CR51,52	diode, Si. 10V 200mA	SG9309	03877	1901-0461
CR56	diode, Si. 100V 40A	1N1184A	05277	1901-0317

Note 1: This assembly is designed for component-level repair; replacement assemblies cannot be supplied.

Table 6-4. Replaceable Parts

REF. DESIG. (AND MODELS)	DESCRIPTION	MFG. PART NUMBER	MFG. CODE	HP PART NUMBER
CR57	SCR	2N3898*		1844-0058
CR58-60	diode, Si. 180V 200mA	1N485		1901-0033
Q3				
6265B	SS NPN Si.	MM2258	04713	1854-0271
Q4	SS PNP Si.	2N4036		1853-0041
Q5	SS PNP Si.	TZ 173	56289	1853-0099
Q9	SS PNP Si.	2N4036		1853-0041
Q10	SS PNP Si.	TZ 173	56289	1853-0099
Q11	SS NPN Si.	2N3391		1854-0071
Q12	SS PNP Si.	TZ 173	56289	1853-0099
Q13-16	SS NPN Si.	2N3391		1854-0071
Q18	SS NPN Si.	2N3417**		1854-0087
Q19	SS NPN Si.	2N3391		1854-0071
Q22, 23	SS PNP Si.	TZ 173	56289	1853-0099
Q24	SS NPN Si.	2N3391		1854-0071
Q25	SS NPN Si.	2N3417**		1854-0087
R1				
6256B,-63B,-64B,-65B, -66B,-67B	fxd, ww 1k 5% 3W	242E1025	56289	0813-0001
6271B,-74B	fxd, ww 2k 5% 3W	242E1025	56289	0811-1806
R2				
6256B	fxd, comp 43 5% 1/2W	EB-4305	01121	0686-4305
6263B,-64B	fxd, comp 82 5% 1/2W	EB-8205	01121	0686-8205
6265B,-66B,-67B	fxd, comp 160 5% 1/2W	EB-1615	01121	0686-1615
6271B,-74B	fxd, comp 240 5% 1/2W	EB-2415	01121	0686-2415
R5	fxd, film 1.5k 1% 1/8W	CEA T-0	07716	0757-0427
R6	fxd, comp 360k 5% 1/2W	EB-3645	01121	0686-3645
R7	fxd, film 61.9k 1% 1/8W	CEA T-0	07716	0757-0460
R8	fxd, comp 560k 5% 1/2W	EB-5645	01121	0686-5645
R9				
6256B,-63B,-64B,-65B, -66B,-67B	fxd, ww 600 5% 5W	243E6015	56289	0811-1860
6271B,-74B	fxd, ww 1k 5% 5W	RS-5	91637	0812-0099
R12				
6256B,-63B,-64B,-65B, 66B,-67B	fxd, ww 680 5% 5W	243E6815	56289	0811-2099
6271B,-74B	fxd, ww 1k 5% 5W	RS-5	91637	0812-0099
R13	fxd, comp (selected)	EB	01121	
R14	fxd, comp 3.3 5% 1/2W	EB-33G5	01121	0686-0335
R15				
6256B,-63B,-71B	fxd, comp 750k 5% 1/2W	EB-7545	01121	0686-7545
6264B,-67B	fxd, comp 1.5M 5% 1/2W	EB-1555	01121	0686-1555
6265B	fxd, comp 560k 5% 1/2W	EB-5645	01121	0686-5645
6266B	fxd, comp 1M 5% 1/2W	EB-1055	01121	0686-1055
6274B	fxd, comp 3.3M 5% 1/2W	EB-3355	01121	0686-3355
R18				
6256B,-64B	fxd, ww 3k 5% 3W	242E3025	56289	0812-0010
6263B,-65B,-66B,-67B, -71B,-74B	fxd, ww 14k 3% 2W	222E14K00H	56289	0811-2692

*nearest commercial equivalent

**leads must be properly bent

Table 6-4. Replaceable Parts

REF. DESIG. (AND MODELS)	DESCRIPTION	MFG. PART NUMBER	MFG. CODE	HP PART NUMBER
R19	fxd, comp (selected)	EB	01121	
R20	fxd, film 1k 1% 1/4W	CEB T-0	07716	0757-0338
R21	fxd, comp 1k 5% 1/2W	EB-1025	01121	0686-1025
R24				
6256B,-64B,-67B,-74B	fxd, ww .05 5% 6W		28480	0811-3364
R25	fxd, comp 360k 5% 1/2W	EB-3645	01121	0686-3645
R26	fxd, film 1.5k 1% 1/8W	CEA T-0	07716	0757-0427
R27				
6256B,-64B,-67B,-74B	fxd, ww .05 5% 6W		28480	0811-3364
R28	fxd, comp 560k 5% 1/2W	EB-5645	01121	0686-5645
R29	fxd, film 7.5k 1% 1/8W	CEA T-0	07716	0757-0440
R30	var. ww 5k	110-F4	11236	2100-1824
R31	fxd, comp 1k 5% 1/2W	EB-1025	01121	0686-1025
R32	fxd, film 160k 1% 1/8W	CEA T-0	07716	0698-5092
R33				
6256B,-63B,-64B,-65B, -66B,-67B,-71B	fxd, comp 330 5% 1/2W	EB-3315	01121	0686-3315
6274B	fxd, comp 24 5% 1/2W	EB-2405	01121	0686-2405
R34	fxd, comp 33k 5% 1/2W	EB-3335	01121	0686-3335
R35	fxd, film 1k 1% 1/8W	CEA T-0	07716	0757-0280
R36	fxd, film 1.5k 1% 1/8W	CEA T-0	07716	0757-0427
R37	fxd, film 560 1% 1/4W	CEB T-0	07716	0698-5146
R38	fxd, comp 10k 5% 1/2W	EB-1035	01121	0686-1035
R39	fxd, comp 200k 5% 1/2W	EB-2045	01121	0686-2045
R41	fxd, film 5.49k 1% 1/8W	CEA T-0	07716	0698-3382
R42	fxd, met. ox. 180 5% 2W	RG42	11502	0698-3626
R43	fxd, film 2k 1% 1/4W	CEA T-0	07716	0757-0739
R44	fxd, film 471 1% 1/8W	CEA T-0	07716	0698-5514
R45	fxd, comp 100k 5% 1/2W	EB-1045	01121	0686-1045
R46	fxd, film 600 1% 1/8W	CEA T-0	07716	0757-1100
R47	fxd, film 7.5k 1% 1/8W	CEA T-0	07716	0757-0440
R48	fxd, film 499 1% 1/4W	CEB T-0	07716	0698-3207
R49				
6256B	fxd, film 6k 1% 1/8W	CEA T-0	07716	0698-3476
6263B,-64B	fxd, film 12k 1% 1/8W	CEA T-0	07716	0698-5088
6265B,-66B,-67B	fxd, film 27.4k 1% 1/8W	CEA T-0	07716	0757-0452
6271B,-74B	fxd, film 39k 1% 1/8W	CEA T-0	07716	0698-6076
R50	fxd, comp 390 5% 1/2W	EB-3915	01121	0686-3915
R51	fxd, film 3.4k 1% 1/8W	CEA T-0	07716	0698-4440
R53	fxd, comp 10 5% 1/2W	EB-1005	01121	0686-1005
R56	var ww 250	110-F4	11236	2100-0439
R57				
6256B,-63B,-64B	fxd, film 471 1% 1/8W	CEA T-0	07716	0698-5514
6265B,-65B,-66B, -71B,-74B	fxd, film 600 1% 1/8W	CEA T-0	07716	0757-1100
R58,59	fxd, comp 100 5% 1/2W	EB-1015	01121	0686-1015
R60	fxd, comp 3k 5% 1/2W	EB-3025	01121	0686-3025

Table 6-4. Replaceable Parts

REF. DESIG. (AND MODELS)	DESCRIPTION	MFG. PART NUMBER	MFG. CODE	HP PART NUMBER
R61				
6256B,-64B,-67B, -71B,-74B	fxd, ww 135 5% 3W	242E	56289	0812-0112
6263B,-65B,-66B	fxd, ww 390 5% 3W	242E3915	56289	0811-1799
R62	fxd, film 471 1% 1/8W	CEA T-0	07716	0698-5514
R63	var. ww 250	110-F4	11236	2100-0439
R64				
6256B,-63B,-64B,-65B, -66B,-67B,-71B,	fxd, film 7.5k 1% 1/8W	CEA T-0	07716	0757-0440
6274B	fxd, film 160k 1% 1/8W	CEA-993	07716	0698-5092
R65				
6256B,-63B,-64B,-65B, -66B,-67B,-71B	fxd, film 5.49k 1% 1/8W	CEA T-0	07716	0698-3382
6274B	fxd, film 91k 1% 1/8W	CEA-993	07716	0698-6080
R66				
6256B,-64B	fxd, film 21.5 1% 1/8W	CEA T-0	07716	0698-3430
6263B,-67B,-74B	fxd, film 100 1% 1/8W	CEA T-0	07716	0757-0401
6265B,-66B,-71B	fxd, film 196 1% 1/8W	CEA T-0	07716	0698-3440
R67				
6256B,-63B,-64B	fxd, ww 150 5% 10W	247E1515	56289	0811-1906
6265B	fxd, ww 600 5% 10W	247E6015	56289	0811-1910
6266B,-67B	fxd, ww 400 5% 10W	247E4015	56289	0811-0942
6271B,-74B	fxd, ww 800 5% 10W	10XM	63743	0811-0944
R68	fxd, ww 220 5% 2W	BWH	07716	0811-1763
R69	fxd, comp 22 5% 1/2W	EB-2205	01121	0686-2205
R70	fxd, met. ox. 1.5k 5% 2W	C42S	16299	0698-3338
R71	fxd, comp 1.8k 5% 1/2W	EB-1825	01121	0686-1825
R72	fxd, comp 9.1k 5% 1/2W	EB-9125	01121	0686-9125
R73	fxd, comp 100k 5% 1/2W	EB-1045	01121	0686-1045
R74				
6256B,-63,-64B, -65B,-66B,-67B	fxd, comp 4.3k 5% 1/2W	EB-4325	01121	0686-4325
6271B	fxd, comp 6.8k 5% 1/2W	EB-6825	01121	0686-6825
6274B	fxd, comp 10k 5% 1/2W	EB-1035	01121	0686-1035
R75	var. ww 5k	110-F4	11236	2100-1824
R76				
6256B	fxd, comp 75k 5% 1/2W	EB-7535	01121	0686-7535
6263B	fxd, comp 160k 5% 1/2W	EB-1645	01121	0686-1645
6264B	fxd, comp 100k 5% 1/2W	EB-1045	01121	0686-1045
6265B,-66B	fxd, comp 200k 5% 1/2W	EB-2045	01121	0686-2045
6267B	fxd, comp 390k 5% 1/2W	EB-3945	01121	0686-3945
6271B,-74B	fxd, comp 300k 5% 1/2W	EB-3045	01121	0686-3045
R77	fxd, comp 4.7 5% 1/2W	EB-47G5	01121	0698-0001
R78	fxd, comp 510 5% 1/2W	EB-5115	01121	0686-5115
R79				
6256B,-63B,-64B,-65B, -66B,-67B,-71B,	fxd, comp 2.4k 5% 1/2W	EB-2425	01121	0686-2425
6274B	fxd, comp 5.1k 5% 1/2W	EB-5125	01121	0686-5125
R84	fxd, comp 10 5% 1/2W	EB-1005	01121	0686-1005

Table 6-4. Replaceable Parts

REF. DESIG. (AND MODELS)	DESCRIPTION	MFG. PART NUMBER	MFG. CODE	HP PART NUMBER
R86				
6256B	fxd, comp 51k 5% 1/2W	EB-5135	01121	0686-5135
6263B,-64B	fxd, comp 100k 5% 1/2W	EB-1045	01121	0686-1045
6265B,-66B,-67B	fxd, comp 200k 5% 1/2W	EB-2045	01121	0686-2045
6271B	fxd, comp 300k 5% 1/2W	EB-3045	01121	0686-3045
6274B	fxd, comp 360k 5% 1/2W	EB-3645	01121	0686-3645
R87				
6256B,-63B,-64B,-65B, -66B,-67B,-71B	fxd, comp 3.3k 5% 1/2W	EB-3325	01121	0686-3325
6274B	fxd, comp 6.2k 5% 1/2W	EB-6225	01121	0686-6225
R90	fxd, comp 180k 5% 1/2W	EB-1845	01121	0686-1845
R91	fxd, comp 15k 5% 1/2W	EB-1535	01121	0686-1535
R94	fxd, comp 10k 5% 1/2W	EB-1035	01121	0686-1035
R96				
6256B,-64B,-71B,-74B	fxd, met. ox. 270 5% 2W	C42S	16299	0698-3629
6263B	fxd, met. ox. 560 5% 2W	BWH	07716	0811-2114
6265B	fxd, met. ox. 1.5k 5% 2W	C42S	16299	0698-3338
6266B	fxd, met. ox. 1k 5% 2W	C42S	16299	0764-0016
6267B	fxd, met. ox. 560 5% 2W	C42S	16299	0764-0015
R97	fxd, comp 5.1k 5% 1/2W	EB-5125	01121	0686-5125
R98				
6256B,-63B,-64B,-65B, -66B,-67B,-74B	fxd, comp 270 5% 1/2W	EB-2715	01121	0686-2715
6271B	fxd, comp 1.5k 5% 1/2W	EB-1525	01121	0686-1525
R99				
6256B,-64B,-65B,-66B, -67B,-71B,-74B	fxd, comp 100 5% 1/2W	EB-1015	01121	0686-1015
6263B	fxd, comp 300 5% 1/2W	EB-3015	01121	0686-3015
R101	fxd, comp 200 5% 1W	GB-2015	01121	0689-2015
R102	fxd, ww 0.125 10% 5W	CWS-2	91637	0811-1846
R103	fxd, comp 200k 5% 1/2W	EB-2045	01121	0686-2045
R104	fxd, ww 135 5% 5W	RS-5	91637	0812-0098
R105	fxd, comp 10 5% 1/2W	EB-1005	01121	0686-1005
R106				
6256B,-63B,-64B,-65B, -66B,-67B	fxd, film 470 1% 1/4W	CEB T-0	07716	0698-3506
6271B,-74B	fxd, film 1.33k 1% 1/4W	CEB T-0	07716	0698-3134
R107	fxd, comp 510 5% 1/2W	EB-5115	01121	0686-5115
R108				
6256B,-64B,-67B,-74B	fxd, film 1.5k 1% 1/8W	CEA T-0	07716	0757-0427
6263B,-65B,-66B	fxd, film 1.33k 1% 1/4W	CEB T-0	07716	0698-3134
6271B	fxd, film 2k 1% 1/4W	CEB T-0	07716	0757-0739
R110	fxd, comp 10k 5% 1/2W	EB-1035	01121	0686-1035
R112	fxd, comp 4.7 5% 1/2W	EB-47G5	01121	0698-0001
R113	fxd, comp 3.9k 5% 1/2W	EB-3925	01121	0686-3925
R114	fxd, film 4.7k 5% 1/4W	CCA-993	07716	0758-0005
T2				
6256B,-63B,-64B,-65B, -66B,-67B,-71B	power transformer		28480	9100-2193
6274B	power transformer		28480	5080-7152

Table 6-4. Replaceable Parts

REF. DESIG. (AND MODELS)	DESCRIPTION	MFG. PART NUMBER	MFG. CODE	HP PART NUMBER
T3,4	pulse transformer		28480	5080-7192
VR1,2	diode, zener 6.2V	1N825		1902-1221
VR3,4	diode, zener 4.22V	SZ 10939-74	04713	1902-3070
VR5	diode, zener 6.19V	SZ 10939-122	04713	1902-0049
VR6,7	diode, zener 2.37V	SZ 10939-2	04713	1902-3002
Z1	dual diff. amp IC	CA 3026	02735	1820-0240
Z2	resistor network		28480	1810-0042
	A2 RFI Filter Ass'y. (See Note 1)			
C1	fxd, paper 0.1μF 250V		28480	0160-4065
C3	fxd, paper .047μF 250Vac		28480	0160-4323
C4	fxd, cer. 5000pF 1kV	C023B102G502ZS31	56289	0160-0899
CR1				
6256B,-64B,-67B,-74B	thyristor, Si. (Triac)	2N5446		1884-0218
6263B,-65B,-66B,-71B	thyristor, Si. (Triac)	SC250M2*	03508	1884-0222
J1,2,4	jumpers for 115Vac operation			
L1A/L1B	inductor		28480	5080-1780
R1	fxd, met. ox. 1.5k 5% 2W	FP-42	27167	0698-3338
R2				
6256B,-64B,-67B,-74B	fxd, met. ox. 330 5% 2W	FP-42	27167	0698-3631
6263B,-65B,-66B,-71B	fxd, met. ox. 180 5% 2W	FP-42	27167	0698-3626
R3	fxd, met. ox. 220 5% 2W	FP-42	27167	0698-3628
RV1	varistor 250Vac	V250LA40B	03508	0837-0117
	A3 Front Panel Electrical			
C1-3				
6263B,-65B,-66B,-71B	fxd, cer .01μF 3kV	41C121A5-CDH	56289	0160-2568
C28-30				
6256B,-64B,-67B,-74B	fxd, cer. .01μF 3kV	41C121A5-CDH	56289	0160-2568
CB1				
6274B	circuit breaker, 20A 250Vac	AM2-A3-A-20-2	74193	3105-0035
DS1	LINE ON indicator light, neon	599-237-White	72765	1450-0419
DS2	OVERVOLTAGE indicator light	MCL-B3-1738	07137	1450-0306
F1	LINE fuse			
6256B	fuse, 8A 250V	314008	75915	2110-0342
6263B,-66B,-71B	fuse, 5A 250V	314005	75915	2110-0227
6264B,-67B	fuse, 10A 250V	314010	75915	2110-0051
6265B	fuse, 4A 250V	312004	75915	2110-0055
F2				
6256B,-63B,-64B,-65B, -66B,-67B,-71B	BIAS fuse, 1/10A 250V	313.100	75915	2110-0234
M1				
6256B	voltmeter, 0-12Vdc		28480	1120-1170
6263B	voltmeter, 0-24Vdc		28480	1120-1159
6264B	voltmeter, 0-24Vdc		28480	1120-1171
6265B,-66B	voltmeter, 0-50Vdc		28480	1120-1161
6267B	voltmeter, 0-50Vdc		28480	1120-1173
6271B	voltmeter, 0-70Vdc		28480	1120-1162
6274B	voltmeter, 0-70Vdc		28480	1120-1174

* nearest commercial equivalent

Table 6-4. Replaceable Parts

REF. DESIG. (AND MODELS)	DESCRIPTION	MFG. PART NUMBER	MFG. CODE	HP PART NUMBER
M2				
6256B,-64B	ammeter, 0-24A		28480	1120-1178
6263B	ammeter, 0-12A		28480	1120-1168
6265B,-71B	ammeter, 0-4A		28480	1120-1166
6266B	ammeter, 0-6A		28480	1120-1167
6267B	ammeter, 0-12A		28480	1120-1176
6274B	ammeter, 0-18A		28480	1120-1177
R10	VOLTAGE – COARSE control			
6256B	var. ww 2.5k	Series 43	12697	2100-2745
6263B,-64B	var. ww 5k	Series 43	12697	2100-1853
6265B,-66B,-67B	var. ww 10k	Series 43	12697	2100-1854
6271B,-74B	var. ww 20k	Series 43	12697	2100-1855
R11	VOLTAGE – FINE control			
6256B,-63B,-64B,-67B	var. ww 50	Series 43	12697	2100-1858
6265B,-66B	var. ww 100	Series 43	12697	2100-1987
6271B,-74B	var. ww 1k	Series 43	12697	2100-1847
R16	CURRENT – COARSE control			
6256B,-64B	var. ww 200	Series 43	12697	2100-1856
6263B,-65B,-66B,-67B, -71B,-74B	var. ww 1k	Series 43	12697	2100-1847
R17	CURRENT – FINE control			
6256B,-64B	var. ww 10	Series 43	12697	2100-1857
6263B,-65B,-66B,-67B, -71B,-74B	var. ww 100	Series 43	12697	2100-1987
R40	fxd, comp 33k 5% 1/2W	EB-3335	01121	0686-3335
R109	OVERVOLTAGE ADJUST			
6256B	var. ww 2.5k	Series 43	12697	2100-2745
6263B,-64B	var. ww 5k	Series 43	12697	2100-1853
6265B,-66B,-67B	var. ww 10k	Series 43	12697	2100-1854
6271B,-74B	var. ww 20k	Series 43	12697	2100-1855
S1				
6256B,-63B,-64B,-65B, -66B,-67B,-71B	switch, DPST toggle, LINE ON	8926K317	27191	3101-0946
	Rear Panel Electrical (See Note 2)			
C19				
6256B,-64B	fxd, elect. 22μF 35V	150D226X0035R2	56289	0180-0160
6267B	fxd, elect. 15μF 50V	150D156X0050R2	56289	0180-1834
6274B	fxd, elect. 10μF 100V	30D106F100DC2	56289	0180-0091
CR11	diode, Si. 100V 40A	1N1184A	05277	1901-0317
CR34	diode, Si. 100V 40A	1N1184AR	05277	1901-0318
Q3				
6256B,-64B,-67B	power NPN Si.	40250	02735	1854-0224
6274B	power NPN Si.	~~60744~~***	02735	~~1854-0464~~ 1854-0917
Q6,7				
6256B,-64B	power NPN Si.	2N3771*		1854-0245

*nearest commercial equivalent ***center (collector) lead is cut off

Note 2: Models 6256B,-64B,-67B,-74B only. The rear panel components of the remaining models are included under Chassis Electrical.

See change sheets

Table 6-4. Replaceable Parts

REF. DESIG. (AND MODELS)	DESCRIPTION	MFG. PART NUMBER	MFG. CODE	HP PART NUMBER
Q6,7				
6267B	power NPN Si.	2N3772		1854-0225
6274B	power NPN Si.	~~60675~~	02735	~~1854-0458~~ 1854-1096
R54	current sampling resistor			
6256B,-64B	fxd, low t. c. alloy, .025 ohms		28480	06264-80001
6267B	fxd, low t. c. alloy, .050 ohms		28480	06267-80001
6274B	fxd, low t. c. alloy, .0333 ohms		28480	5080-7105
	Chassis Electrical			
B1				
6274B	fan, cooling, 115V 50/60Hz	WS 2107FL-55	28875	3160-0056
C13				
6256B,-64B	fxd, elect. 34000μF 30V	(32D)D40073-DQB	56289	0180-1930
6267B	fxd, elect. 40000μF 50V	(32D)D42343-DQB	56289	0180-1931
6274B	fxd, elect. 22000μF 75V	(32D)D38829-DQB	56289	0180-1929
C14				
6256B,-64B	fxd, elect. 34000μF 30V	(32D)D40073-DQB	56289	0180-1930
6263B,-66B	fxd, elect. 40000μF 50V	(32D)D42343-DQB	56289	0180-1931
6265B	fxd, elect. 22000μF 50V	(32D)D40078-DQB	56289	0180-1928
6271B,-74B	fxd, elect. 22000μF 75V	(32D)D38829-DQB	56289	0180-1929
C20				
6256B,-63B,-64B	fxd, elect. 8600μF 25V	(32D)D46882-DQB	56289	0180-1882
6265B	fxd, elect. 4500μF 55V	(32D)D45312-DQB	56289	0180-2098
6266B	fxd, elect. 5000μF 50V	36D7119	56289	0180-1920
6267B	fxd, elect. 5000μF 45V	(36D)D38008-DQB	56289	0180-1919
6271B,-74B	fxd, elect. 1600μF 85V	32D5279-DQB	56289	0180-1986
C23-26				
6256B,-64B,-67B,-74B	fxd, cer. .05μF 500V	33617A	56289	0150-0052
CR11				
6263B,-66B	diode, Si. 100V 40A	1N1184A	05277	1901-0317
CR21				
6256B,-63B,-64B, -67B,-74B	diode, Si. 100V 40A	1N1184AR	05277	1901-0318
6266B	diode, Si. 100V 12A	1N1200A	02735	1901-0002
CR22,23				
6256B,-63B,-64B, -67B,-74B	diode, Si. 100V 40A	1N1184A	05277	1901-0317
6266B	diode, Si. 100V 12A	1N1200A	02735	1901-0002
CR24				
6256B,-63B,-64B, -67B,-74B	diode, Si. 100V 40A	1N1184AR	05277	1901-0318
6266B	diode, Si. 100V 12A	1N1200A	02735	1901-0002
CR34				
6263B,-66B	diode, Si. 100V 40A	1N1184A	05277	1901-0317
Q3				
6263B,-66B	power NPN Si.	40250	02735	1854-0224
6271B	power NPN Si.	60744 ***	02735	1854-0464

See data sheets

*** center (collector) lead is cut off.

Table 6-4. Replaceable Parts

REF. DESIG. (AND MODELS)	DESCRIPTION	MFG. PART NUMBER	MFG. CODE	HP PART NUMBER
Q6				
6263B,-66B	power NPN Si.	2N3771*		1854-0245
6265B	power NPN Si.	2N3772		1854-0225
6271B	power NPN Si.	60675	02735	1854-0458
R54	current sampling resistor			
6263B	fxd, low t. c. alloy, 0.050 ohms		28480	06263-80001
6265B,-71B	fxd, low t. c. alloy, 0.167 ohms		28480	5080-7125
6266B	fxd, low t. c. alloy, 0.100 ohms		28480	06266-80001
T1				
6256B	power transformer		28480	06256-80091
6263B	power transformer		28480	06263-80091
6264B	power transformer		28480	06264-80091
6265B	power transformer		28480	06265-80091
6266B	power transformer		28480	06266-80091
6267B	power transformer		28480	06267-80091
6271B	power transformer		28480	06271-80091
6274B	power transformer		28480	06274-80091
	A1 Main PC Board Mechanical			
TB1				
6256B,-64B,-67B,-74B	barrier strip, 11-terminal		28480	0360-1238
6263B,-65B,-66B,-71B	barrier strip, 15-terminal		28480	0360-1548
6256B,-64B,-67B,-74B	barrier strip jumpers (qty. 6)		28480	0360-1143
6263B,-65B,-66B,-71B	barrier strip jumpers (qty. 7)		28480	0360-1143
	A2 RFI Filter Ass'y. Mechanical			
	heat sink		28480	5020-2281
	heat sink mounting standoff, .687" (qty. 3)		28480	0380-0625
	PC board mounting standoff, .938" (qty. 4)		28480	0380-0576
	washer, fiber, L1A/L1B insulator		28480	3050-0697
	cover		28480	5020-2283
	cover standoff, .312" (qty. 4)		28480	0380-0356
	A3 Front Panel Ass'y. Mechanical			
6256B	front panel		28480	06256-60006
6263B	front panel		28480	06263-60004
6264B	front panel		28480	06264-60006
6265B	front panel		28480	06265-60004
6266B	front panel		28480	06266-60004
6267B	front panel		28480	06267-60006
6271B	front panel		28480	06271-60004
6274B	front panel		28480	06274-00014
6256B,-63B,-64B,-65B, -66B,-67B,-71B	fuseholder (qty. 2)	342014	75915	1400-0084
6256B,-63B,-64B,-65B, -66B,-67B,-71B	hex-nut, nylon, fuseholder (qty. 2)		28480	2950-0131

*nearest commercial equivalent

Table 6-4. Replaceable Parts

REF. DESIG. (AND MODELS)	DESCRIPTION	MFG. PART NUMBER	MFG. CODE	HP PART NUMBER
6256B,-63B,-64B,-65B, -66B,-67B,-71B	lockwasher, fuseholder (qty. 2)		28480	2190-0054
6256B,-64B,-67B,-74B	meter bezel (qty. 2)		28480	4040-0293
6263B,-65B,-66B,-71B	meter bezel (qty. 2)		28480	4040-0414
	spring, compression, meter mount (qty. 8)		28480	1460-0256
	knob (qty. 4)		28480	0370-0084
	binding post, black (qty. 2)	DF21BC	58474	1510-0039
	binding post, red	DF21RC	58474	1510-0103
	bushing, R109 mount		28480	1410-0052
	retainer, push-on, DS1 and DS2 (qty. 2)		28480	0510-0123
	Rear Panel Ass'y. Mechanical (See Note 3)			
6256B	rear chassis		28480	06256-60005
6264B,-67B	rear chassis		28480	06264-60005
6274B	rear chassis		28480	06274-60010
	heat sink, 4 5/8" x 5 1/8"		28480	5020-8066
	heat sink, 4 5/8" x 2 1/2"		28480	5020-8071
TB3	barrier strip, 3-term, ac input	603-3	75382	0360-1596
	insulator, ac barrier strip (qty. 2)		28480	0380-0703
TB2	barrier strip, 6-term, output	601-YSY-6	75382	0360-1224
	jumper, output barrier strip (qty. 3)		28480	0360-1541
	hex standoff, .750", R54 (qty. 2)		28480	0380-0091
	transistor insulator, mica, Q6,7 (qty. 2)		28480	0340-0181
6256B,-64B,-67B	transistor insulator, mica, Q3		28480	0340-0180
6274B	transistor, insulator, mica, Q3		28480	0340-0703
	transistor pin insulator, Q6, 7 (qty. 4)		28480	0340-0166
	transistor screw insulator, Q3,6,7 (qty. 6)		28480	0340-0168
	insulating bushing, CR11, CR34, Q3 (qty. 3)		28480	0340-0169
	insulator, mica, CR11, 34 (qty. 2)		28480	2190-0710
	Chassis Mechanical			
6256B,-64B,-67B,-74B	chassis assembly (includes left and right sides, center tray, and front panel supports)		28480	5060-7951
6263B,-65B,-66B,-71B	chassis assembly (includes left and right sides, center tray, and front panel supports)		28480	5060-7952
	printed circuit board guide (qty. 2)		28480	0403-0150
6256B,-63B,-64B,-65B,- -66B,-67B,-71B	covers, top and bottom, perforated (qty. 2)		28480	5000-9440
6274B	covers, top and bottom, solid (qty. 2)		28480	06274-00013

Note 3: Models 6256B,-64B,-67B,-74B only. The rear panel components of the remaining models are included under Chassis Mechanical.

Table 6-4. Replaceable Parts

REF. DESIG. (AND MODELS)	DESCRIPTION	MFG. PART NUMBER	MFG. CODE	HP PART NUMBER
6256B,-64B,-67B,-74B	handles (qty. 2)		28480	5020-5715
6263B,-65B,-66B,-71B	handles (qty. 2)		28480	5020-5751
	screw, 10-32, 1.75" (for handles, qty. 4)		28480	2680-0173
6263B,-65B,-66B,-71B	rear panel		28480	5020-2502
6263B,-65B,-66B,-71B	heat sink (qty. 2)		28480	5020-8065
6263B,-65B,-66B,-71B	hex standoff, .250", R54 (qty. 2)		28480	0380-0716
6263B,-65B,-66B,-71B	barrier strip cover, (for 15-term.strip)		28480	5000-3098
6256B,-64B,-67B,-74B	barrier strip cover,(for 11-and 6-term strips)		28480	5000-9452
6256B,-64B,-67B,-74B	barrier strip cover, (for ac input)		28480	5000-6249
6263B,-65B,-66B,-71B	line cord			8120-0852
6263B,-65B,-66B,-71B	strain relief bushing, line cord			0400-0098
6256B,-64B,-74B	capacitor clamp, C13,14		28480	5000-6017
6267B	capacitor clamp, C13		28480	06267-00001
6256B,-64B,-67B,-74B	capacitor clamp, C20			0180-0078
6263B,-65B,-66B,-71B	capacitor clamp, C14		28480	5000-6223
6263B,-65B,-66B,-71B	capacitor clamp, C20		28480	5000-6267
6256B,-64B,-67B,-74B	grommet, 7/8" (qty. 2)		28480	0400-0063
6256B,-64B,-74B	bus bar for C13, 14 (qty. 2)		28480	5000-6038
6274B	fan spacer		28480	06274-00010
6263B,-66B	insulator, mica, CR11,34 (qty. 2)		28480	2190-0710
6263B,-66B	insulating bushing, CR11,34 (qty. 2)		28480	0340-0169
6256B,-63B,-64B, -67B,-74B	insulator, mica, CR21-24 (qty. 4)		28480	2190-0710
6256B,-63B,-64B, -67B,-74B	shoulder washer, CR21-24 (qty. 4)		28480	2190-0898
6266B	insulator, mica, CR21-24 (qty. 4)		28480	2190-0498
6266B	shoulder washer, CR21-24 (qty. 4)		28480	2190-0492
6263B,-66B,-71B	transistor screw insulator, Q3 (qty. 2)		28480	0340-0168
6263B,-66B,-71B	insulating bushing, Q3		28480	0340-0169
6263B,-66B	transistor insulator, mica, Q3		28480	0340-0180
6271B	transistor insulator, mica, Q3		28480	0340-0703
6263B,-65B,-66B,-71B	transistor pin insulator, Q6 (qty. 2)		28480	0340-0166
6263B,-65B,-66B,-71B	transistor screw insulator, Q6 (qty. 2)		28480	0340-0168
6263B,-65B,-66B,-71B	transistor insulator, mica, Q6		28480	0340-0181
6256B,-64B,-67B,-74B	carton			9211-1178
6256B,-64B,-67B,-74B	floater			9220-1401
6263B,-65B,-66B,-71B	carton			9211-1176
6263B,-65B,-66B,-71B	floater			9220-1400

Table 6-4. Replaceable Parts

REF. DESIG. (AND MODELS)	DESCRIPTION	MFG. PART NUMBER	MFG. CODE	HP PART NUMBER
	OPTIONS:			
	OPTION 005			
	50Hz AC Input			
R74				
6266B	fxd, comp 8.2k 5% 1/2W	EB-8225	01121	0686-8225
R76				
6256B,-66B	fxd, comp 150k 5% 1/2W	EB-1545	01121	0686-1545
6263B,-64B	fxd, comp 200k 5% 1/2W	EB-2045	01121	0686-2045
6265B	fxd, comp 300k 5% 1/2W	EB-3045	01121	0686-3045
6267B	fxd, comp 750k 5% 1/2W	EB-7545	01121	0686-7545
6271B	fxd, comp 360k 5% 1/2W	EB-3645	01121	0686-3645
6274B	fxd, comp 430k 5% 1/2W	EB-4345	01121	0686-4345
R78				
6256B	fxd, comp 750 5% 1/2W	EB-7515	01121	0686-7515
6263B,-64B,-65B,-66B,--67B,-71B,-74B	fxd, comp 270 5% 1/2W	EB-2715	01121	0686-2715
R79				
6263B,-64B,-65B,-66B,-67B,-71B	fxd, comp 4.7k 5% 1/2W	EB-4725	01121	0686-4725
	OPTION 007			
	10-Turn Voltage Control			
R10				
6256B	var. ww 2k 10-turn	Series 8400	84048	2100-2029
6263B,-64B	var. ww 5k 10-turn	Series 8400	84048	2100-1865
6265B,-66B,-67B	var. ww 10k 10-turn	Series 8400	84048	2100-1866
6271B,-74B	var. ww 20k 10-turn	Series 8400	84048	2100-1867
	knob		28480	0370-0137
	OPTION 008			
	10-Turn Current Control			
R16				
6256B,-64B	var. ww 200 10-turn	Series 8400	84048	2100-1863
6263B,-65B,-66B,-67B,-71B,-74B	var. ww 1k 10-turn	Series 8400	84048	2100-1864
	knob		28480	0370-0137
	OPTION 009			
	10-Turn Voltage and Current Controls			
R10	voltage control			
6256B	var. ww 2k 10-turn	Series 8400	84048	2100-2029
6263B,-64B	var. ww 5k 10-turn	Series 8400	84048	2100-1865
6265B,-66B,-67B	var. ww 10k 10-turn	Series 8400	84048	2100-1866
6271B,-74B	var. ww 20k 10-turn	Series 8400	84048	2100-1867
R16	current control			
6256B,-64B	var. ww 200 10-turn	Series 8400	84048	2100-1863
6263B,-65B,-66B,-67B,-71B,-74B	var. ww 1k 10-turn	Series 8400	84048	2100-1864
	knob (qty. 2)		28480	0370-0137

Table 6-4. Replaceable Parts

REF. DESIG. (AND MODELS)	DESCRIPTION	MFG. PART NUMBER	MFG. CODE	HP PART NUMBER
	OPTION 010			
	Chassis Slides			
	slides	SS-168-NT	83508	1490-0872
		20-21-25/32-BK0106C		
6256B,-64B,-67B,-74B	spacer, slide (qty. 2)		28480	5000-6234
	OPTION 013			
	3-Digit Decadial Voltage Control			
R10				
6256B	var. ww 2k 10-turn	Series 8400	84048	2100-2029
6263B,-64B	var. ww 5k 10-turn	Series 8400	84048	2100-1865
6265B,-66B,-67B	var. ww 10k 10-turn	Series 8400	84048	2100-1866
6271B,-74B	var. ww 20k 10-turn	Series 8400	84048	2100-1867
	3-digit turns-counting dial	411	12697	1140-0020
	OPTION 014			
	3-Digit Decadial Current Control			
R16				
6256B,-64B	var. ww 200 10-turn	Series 8400	84048	2100-1863
6263B,-65B,-66B,-67B, -71B,-74B	var. ww 1k 10-turn	Series 8400	84048	2100-1864
	3-digit turns-counting dial	411	12697	1140-0020
	OPTION 020			
	Adjustable Voltage Programming			
R121	fxd, film 221k 1% 1/8W	CEA T-0	07716	0757-0473
R122	var. ww 15k	CT-100-4	84048	2100-0896
R123	fxd, film 249k 1% 1/8W	CEA T-0	07716	0757-0270
R124	var. ww 15k	CT-100-4	84048	2100-0896
	OPTION 021			
	Adjustable Current Programming			
R125				
6256B,-64B	fxd, film 23k 1% 1/8W	CEA-993	07716	0698-3269
6263B,-65B,-66B,-67B, -71B,-74B	fxd, film 200k 1% 1/8W	CEA-993	07716	0757-0472
R126	var. ww 15k	CT-100-4	84048	2100-0896
R127	fxd, film 390k 1% 1/8W	CEA-993	07716	0698-5093
R128	var. ww 15k	CT-100-4	84048	2100-0896
	OPTION 022			
	Adjustable Voltage and Current Programming			
R121	fxd, film 221k 1% 1/8W	CEA T-0	07716	0757-0473
R122	var. ww 15k	CT-100-4	84048	2100-0896
R123	fxd, film 249k 1% 1/8W	CEA T-0	07716	0757-0270
R124	var. ww 15k	CT-100-4	84048	2100-0896

Table 6-4. Replaceable Parts

REF. DESIG. (AND MODELS)	DESCRIPTION	MFG. PART NUMBER	MFG. CODE	HP PART NUMBER
R125				
6256B,-64B	fxd, film 23k 1% 1/8W	CEA-993	07716	0698-3269
6263B,-65B,-66B,-67B, -71B,-74B	fxd, film 200k 1% 1/8W	CEA-993	07716	0757-0472
R126	var. ww 15k	CT-100-4	84048	2100-0896
R127	fxd, film 390k 1% 1/8W	CEA-993	07716	0698-5093
R128	var. ww 15k	CT-100-4	84048	2100-0896
	OPTION 027			
	208Vac Input			
F1	LINE fuse			
6256B	fuse, 5A 250V	314005	75915	2110-0227
6263B,-66B,-71B	fuse, 3A 250V	312003	75915	2110-0003
6264B,-67B	fuse, 6A 250V	312006	75915	2110-0056
6265B	fuse, 2A 250V	312002	75915	2110-0002
F2	BIAS fuse			
6256B,-63B,-64B,-65B, -66B,-67B,-71B	fuse, 62mA 250V	313.062	75915	2110-0311
J3	(Disconnect J1, J2, and J4 in the A2 RFI Ass'y. and install J3. See Section II for complete input voltage conversion instructions.)			
R40	fxd, comp 120k 5% 1/2W	EB-1245	01121	0686-1245
	OPTION 028			
	230Vac Input			
F1	LINE fuse			
6256B	fuse, 5A 250V	314005	75915	2110-0227
6263B,-66B,-71B	fuse, 3A 250V	312003	75915	2110-0003
6264B,-67B	fuse, 6A 250V	312006	75915	2110-0056
6265B	fuse, 2A 250V	312002	75915	2110-0002
F2	BIAS fuse			
6256B,-63B,-64B,-65B, -66B,-67B,-71B	fuse, 62mA 250V	313.062	75915	2110-0311
J3	(Disconnect J1, J2, and J4 in the A2 RFI Ass'y. and install J3. See Section II for complete input voltage conversion instructions.)			
R40	fxd, comp 120k 5% 1/2W	EB-1245	01121	0686-1245
	OPTION 040 **Interfacing for Multiprogrammer Operation** (The replaceable parts for Option 040 are the same as for Option 022.)			

SECTION VII
CIRCUIT DIAGRAMS AND COMPONENT LOCATION DIAGRAMS

This section contains the circuit schematics and component location diagrams necessary for the maintenance of this power supply. Separate schematics, circuit board component location diagrams, and chassis component location diagrams are provided for the models in 5 1/4-inch-high cabinets (Models 6256B, 6264B, 6267B, and 6274B) and for the models in 3 1/2-inch-high cabinets (Models 6263B, 6265B, 6266B, and 6271B). The A2 RFI Assembly circuit board shown in Figure 7-1 is common to all eight models. The circuit board shown in Figure 7-2 is used only in instruments with Option 020, 021, 022, or 040. Some of the components on this board are not used with some options. The test points on the schematics indicated by circled numbers correspond to those on the component location diagrams and in the troubleshooting procedures in Section V.

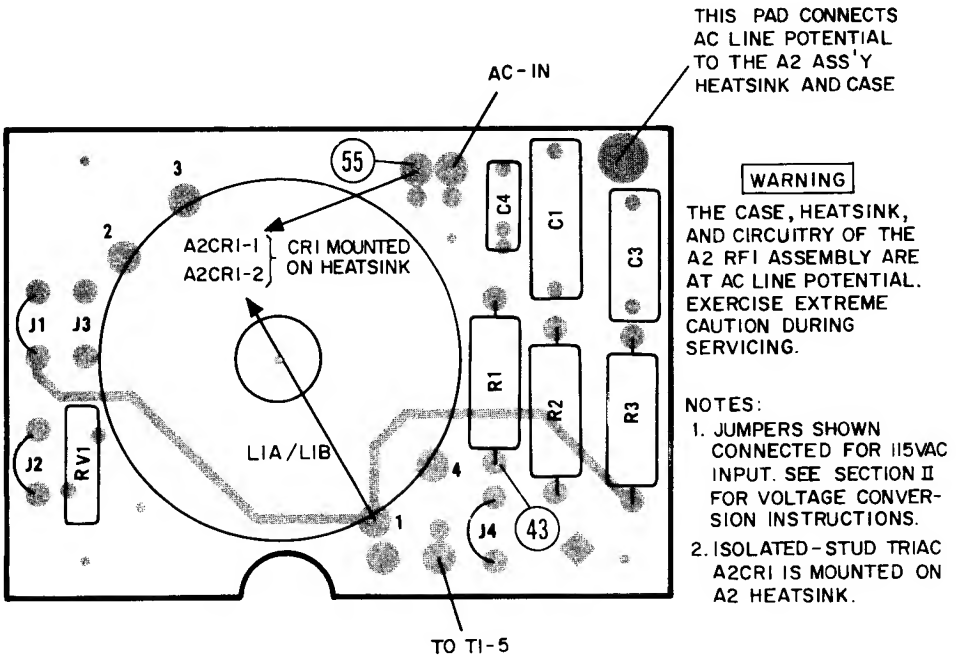

Figure 7-1. A2 RFI Assembly Component Locations

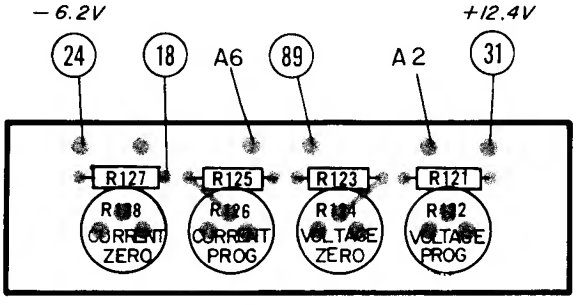

Figure 7-2. Option 020, 021, 022, 040 Circuit Board Component Locations

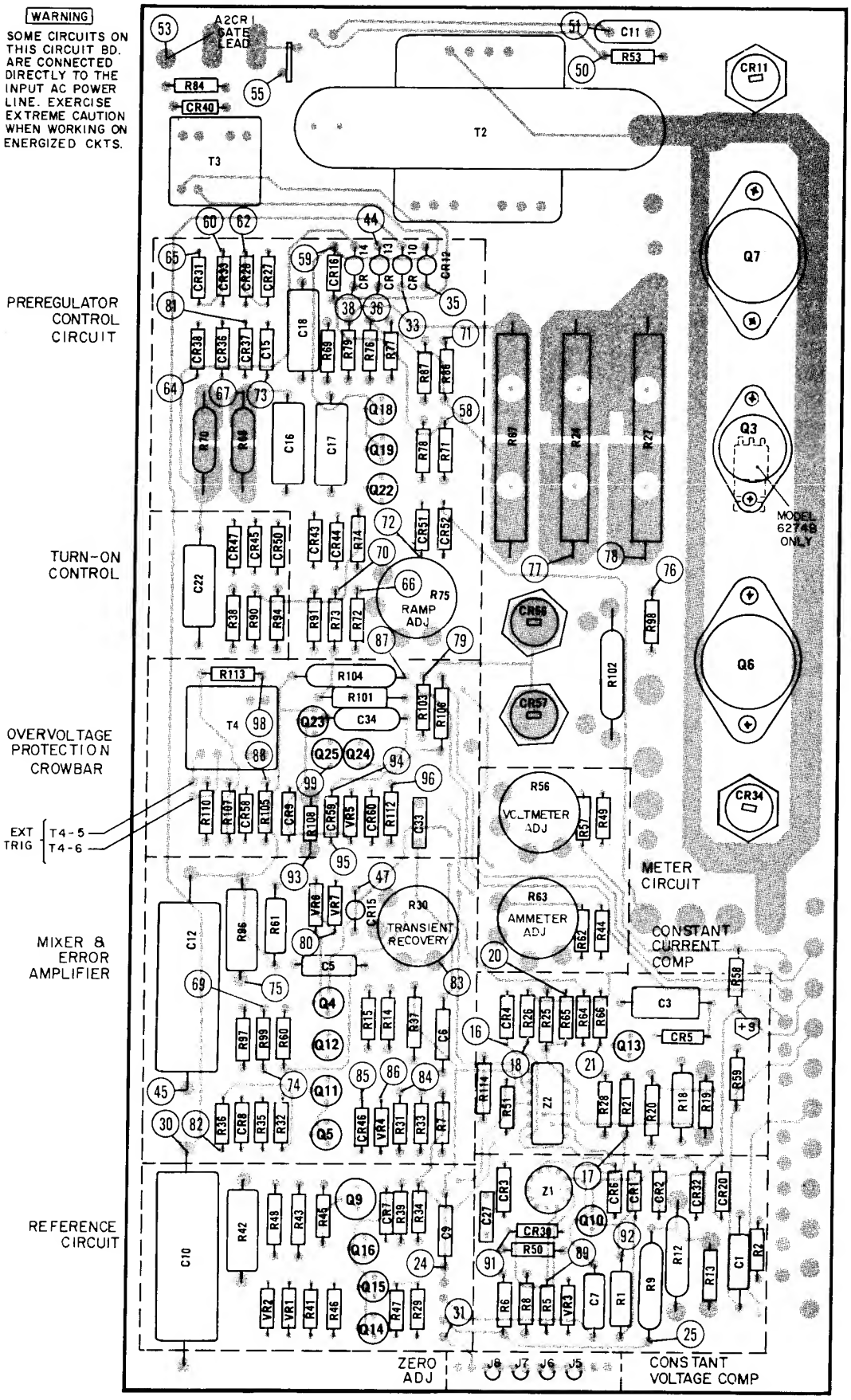

Figure 7-3. A1 Board Component Locations for Models 6256B, 6264B, 6267B, and 6274B

SCHEMATIC TABLE

	6256B	6264B	6267B	6274B
C1	5μF, 50V	5μF, 50V	5μF, 50V	5μF, 65V
C5	1000pF, 200V	1000pF, 200V	1000pF, 200V	2200pF, 200V
C13	34000μF, 30V	34000μF, 50V	40000μF, 50V	22000μF, 75V
C14	34000μF, 30V	34000μF, 30V	NOT USED	22000μF, 75V
C19	22μF, 35V	22μF, 35V	15μF, 50V	10μF, 100V
C20	8600μF, 25V	8600μF, 25V	5000μF, 45V	1600μF, 85V
F1	8A	10A	10A	NOT USED
R1	1K, 5%, 3W	1K, 5%, 3W	1K, 5%, 3W	2K, 5%, 3W
R2	43, 5%, 1/2W	82, 5%, 1/2W	160, 5%, 1/2W	240, 5%, 1/2W
R9	600, 5%, 5W	600, 5%, 5W	600, 5%, 5W	1K, 5%, 5W
R10	2.5K	5K	10K	20K
R11	50	50	50	1K
R12	680, 5%, 5W	680, 5%, 5W	680, 5%, 5W	1K, 5%, 5W
R15	750K, 5%, 1/2W	1.5M, 5%, 1/2W	1.5M, 5%, 1/2W	3.3M, 5%, 1/2W
R16	200	200	1K	1K
R17	10	10	100	100
* R18	3K, 5%, 3W	3K, 5%, 3W	14K, 5%, 2W	14K, 5%, 2W
R33	330, 5%, 1/2W	330, 5%, 1/2W	330, 5%, 1/2W	24, 5%, 1/2W
R49	6K, 1%, 1/8W	12K, 1%, 1/8W	27.4K, 1%, 1/8W	39K, 1%, 1/8W
R54	.025	.025	.050	.0333
R57	471, 1%, 1/8W	471, 1%, 1/8W	600, 1%, 1/8W	600, 1%, 1/8W
R64	75K, 1%, 1/8W	75K, 1%, 1/8W	75K, 1%, 1/8W	160K, 1%, 1/8W
R65	5.49K, 1%, 1/8W	5.49K, 1%, 1/8W	5.49K, 1%, 1/8W	91K, 1%, 1/8W
R66	21.5, 1%, 1/8W	21.5, 1%, 1/8W	100, 1%, 1/8W	100, 1%, 1/8W
R67	150, 5%, 10W	150, 5%, 10W	400, 5%, 10W	800, 5%, 10W
R74	4.3K, 5%, 1/2W	4.3K, 5%, 1/2W	4.3K, 5%, 1/2W	10K, 5%, 1/2W
R76	75K, 5%, 1/2W	100K, 5%, 1/2W	390K, 5%, 1/2W	300K, 5%, 1/2W
R79	24K, 5%, 1/2W	24K, 5%, 1/2W	2.4K, 5%, 1/2W	5.1K, 5%, 1/2W
R86	51K, 5%, 1/2W	100K, 5%, 1/2W	200K, 5%, 1/2W	360K, 5%, 1/2W
R87	3.3K, 5%, 1/2W	3.3K, 5%, 1/2W	3.3K, 5%, 1/2W	6.2K, 5%, 1/2W
R96	270, 5%, 2W	270, 5%, 2W	560, 5%, 2W	270, 5%, 2W
R106	470, 1%, 1/4W	470, 1%, 1/4W	470, 1%, 1/4W	1.33K, 1%, 1/4W
R109	2.5K	5K	10K	20K

SCHEMATIC NOTES

1. ALL RESISTORS ARE IN OHMS, 1/2W ±5%, UNLESS OTHERWISE NOTED
2. ALL 1/8W AND 1/4W RESISTORS ARE ±1%, UNLESS OTHERWISE NOTED
3. ALL CAPACITORS ARE IN MICROFARADS, UNLESS OTHERWISE NOTED
4. REAR TERMINALS ARE SHOWN IN NORMAL STRAPPING FOR USE OF FRONT PANEL CONTROLS
5. ▭ DENOTES FRONT PANEL MARKING
6. ——— DENOTES VOLTAGE FEEDBACK PATH.
7. ——— DENOTES CURRENT FEEDBACK PATH
8. TRANSFORMERS AND RFI CHOKE SHOWN STRAPPED FOR 115VAC OPERATION.
9. DC VOLTAGES WERE MEASURED UNDER THE FOLLOWING CONDITIONS.
   A. HEWLETT-PACKARD MODEL 427A OR EQUIVALENT
   B. 115VAC INPUT
   C. VOLTAGES REFERENCED +S, UNLESS OTHERWISE NOTED
   D. VOLTAGES ARE TYPICAL ±10%, UNLESS OTHERWISE NOTED
   E. ALL READINGS TAKEN IN CONSTANT VOLTAGE OPERATION AT MAXIMUM RATED OUTPUT WITH NO LOAD CONNECTED AND CURRENT CONTROLS TURNED FULLY CLOCKWISE
10. ALL COMPONENTS LOCATED ON MAIN PRINTED CIRCUIT BOARD, UNLESS OTHERWISE INDICATED
11. * DENOTES CHASSIS-MOUNTED COMPONENTS
12. PIN LOCATIONS FOR INTEGRATED CIRCUITS ARE AS FOLLOWS:

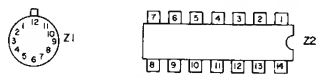

(TOP VIEWS)

13. PIN LOCATIONS FOR SEMICONDUCTORS ARE AS FOLLOWS:

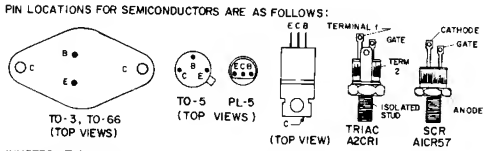

14. JUMPERS J7 & J8 REMOVED WHEN SUPPLY IS EQUIPPED WITH OPTION 020, 022, OR 040. JUMPERS J5 & J6 REMOVED WHEN SUPPLY IS EQUIPPED WITH OPTION 021, 022, OR 040
15. FOR 115VAC INPUT, CONNECT JUMPERS J1, J2, AND J4, AND DISCONNECT J3. FOR 208 OR 230VAC INPUT, CONNECT J3 AND DISCONNECT J1, J2, AND J4
16. SEE FIGURE 4-4 FOR PREREGULATOR CONTROL CIRCUIT WAVEFORMS.

WARNING

SOME CIRCUITS IN THIS POWER SUPPLY ARE CONNECTED DIRECTLY TO THE INPUT AC POWER LINE. THE CASE AND HEATSINK OF THE A2 RFI ASSEMBLY ARE ALSO AT AC LINE POTENTIAL. EXERCISE EXTREME CAUTION WHEN WORKING ON ENERGIZED CIRCUITS.

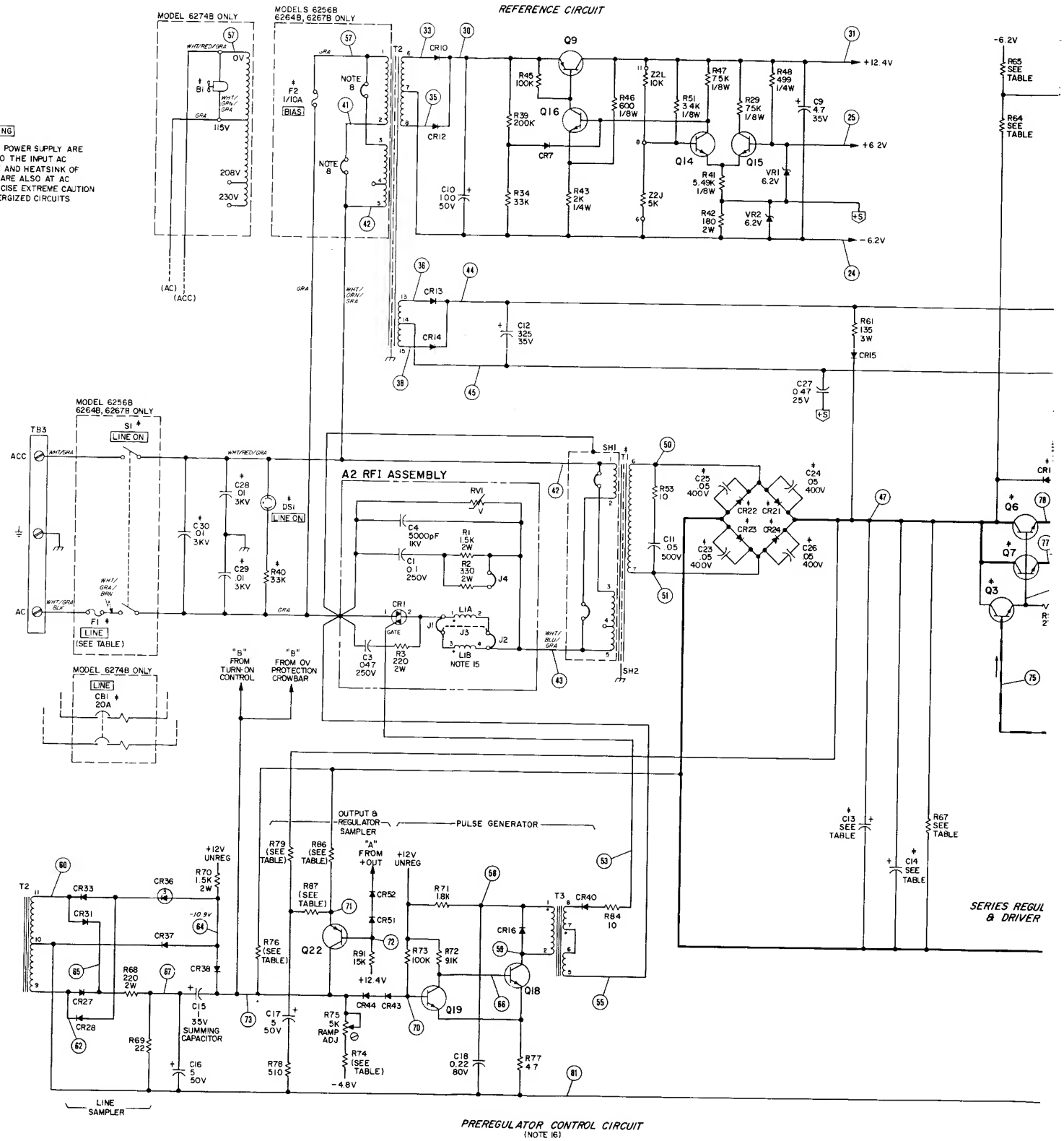

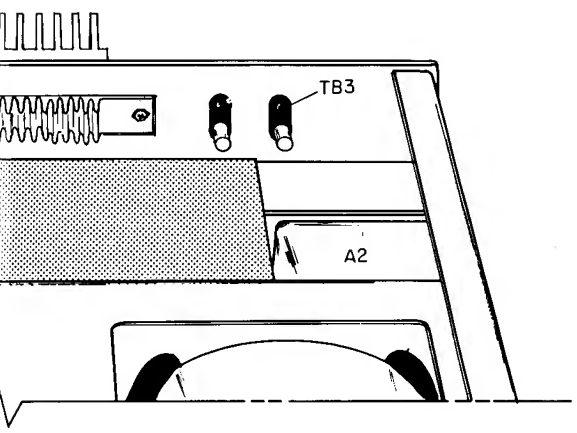

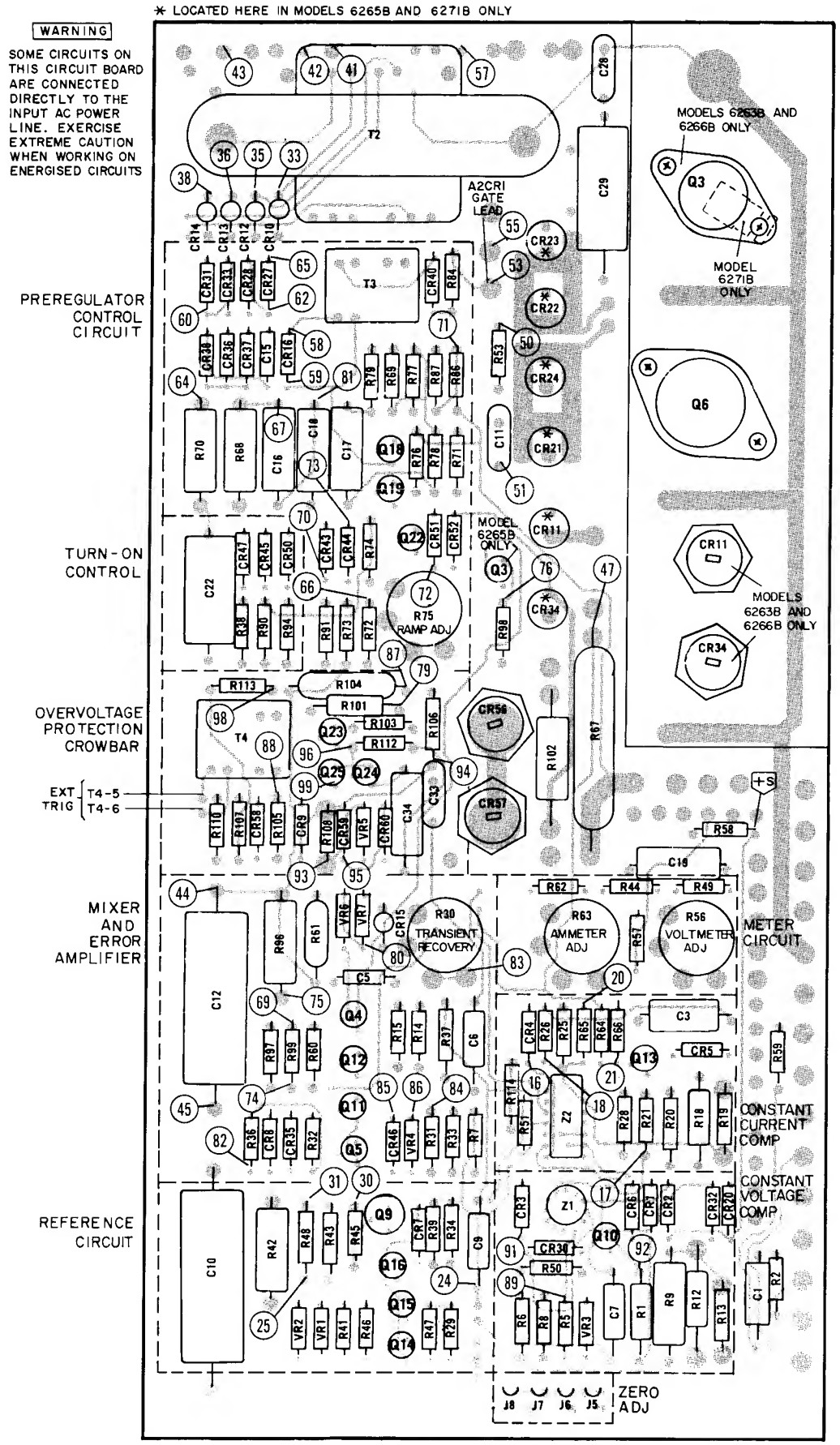

Figure 7-6. A1 Board Component Locations for Models 6263B, 6265B, 6266B, and 6271B

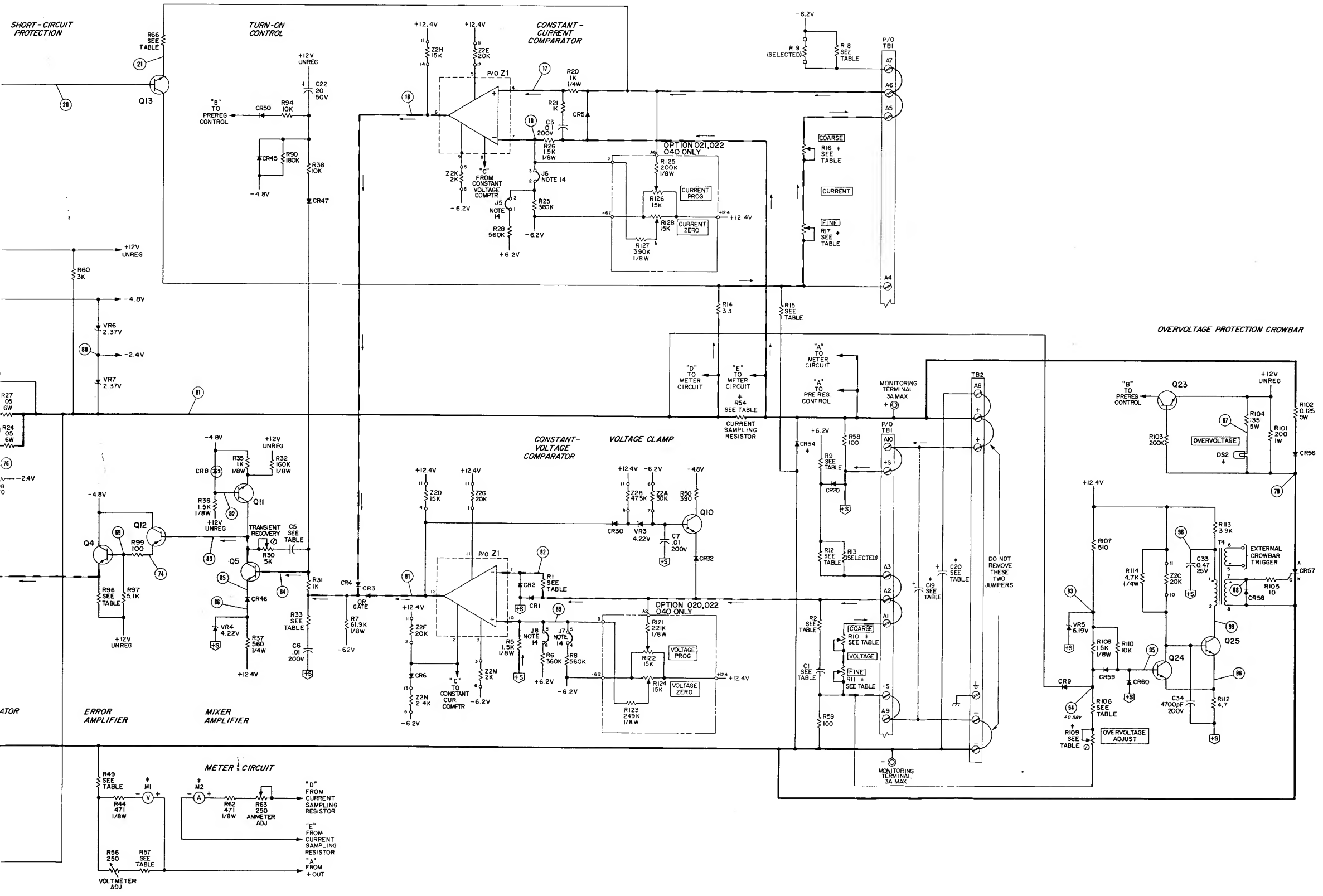

Figure 7-4. Models 6256B, 6264B, 6267B, and 6274B, Schematic Diagram

WARNING

THE CASE AND HEATSINK OF THE A2 RFI ASSEMBLY ARE AT AC LINE POTENTIAL. EXERCISE EXTREME CAUTION DURING SERVICING.

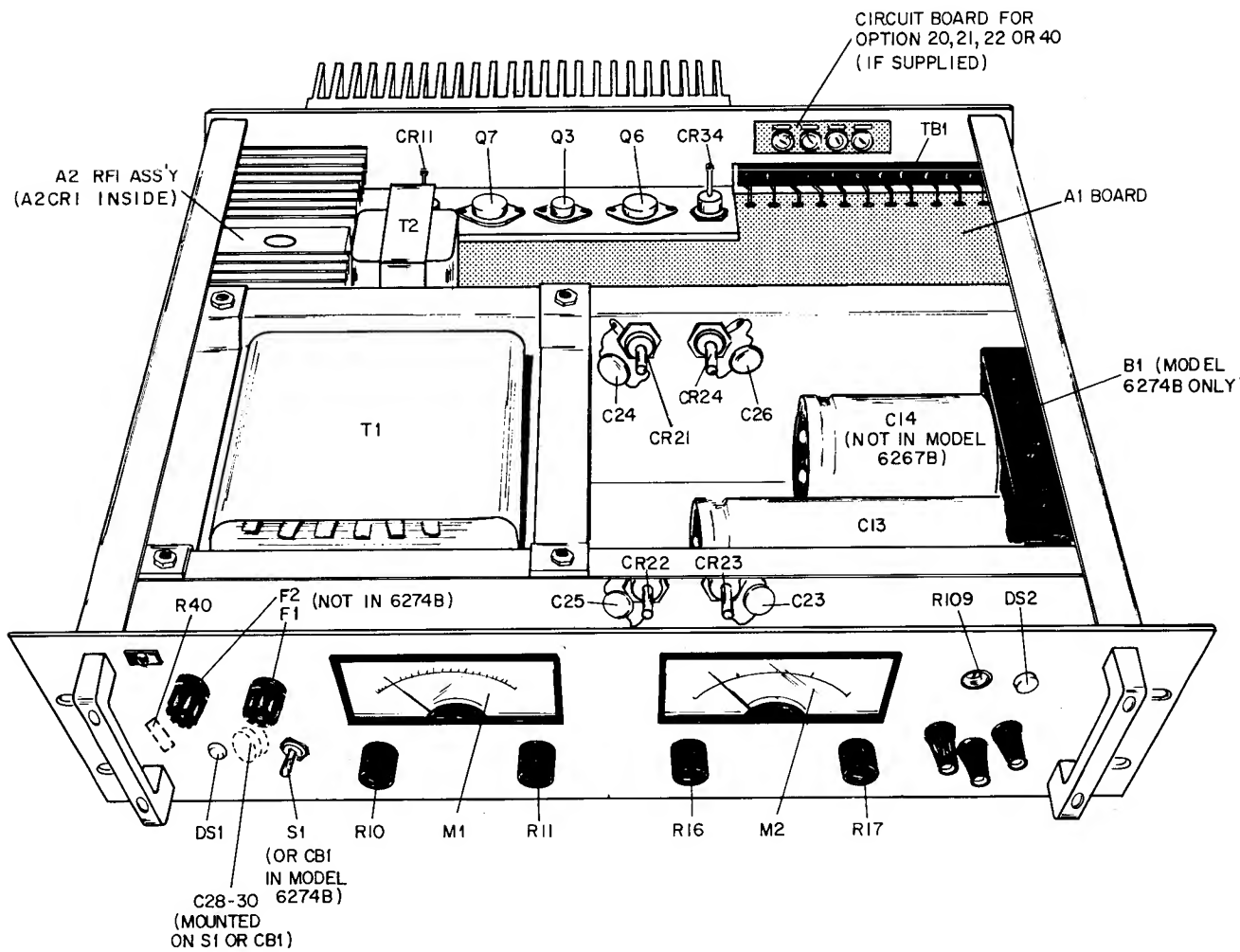

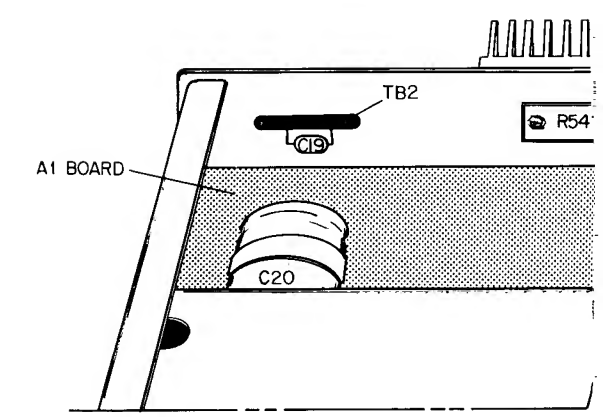

Figure 7-5. Chassis Component Locations for Models 6256B, 6264B, 6267B, and 6274B

SCHEMATIC TABLE

	6263B	6265B	6266B	6271B
C1	5μF, 50V	5μF, 50V	5μF, 50V	5μF, 65V
C14	40000μF, 50V	22000μF, 50V	40000μF, 50V	22000μF, 50V
C19	22μF, 35V	15μF, 50V	15μF, 50V	10μF, 100V
C20	8600μF, 25V	4500μF, 55V	5000μF, 50V	1600μF, 85V
F1	5A	4A	5A	5A
R1	1K, 5%, 3W	1K, 5%, 3W	1K, 5%, 3W	2K, 5%, 3W
R2	82, 5%, 1/2W	160, 5%, 1/2W	160, 5%, 1/2W	240, 5%, 1/2W
R9	600, 5%, 5W	600, 5%, 5W	600, 5%, 5W	1K, 5%, 5W
R10	5K	10K	10K	20K
R11	50	100	100	1K
R12	680, 5%, 5W	680, 5%, 5W	680, 5%, 5W	1K, 5%, 5W
R15	750K, 5%, 1/2W	560K, 5%, 1/2W	1M, 5%, 1/2W	750K, 5%, 1/2W
R49	12K, 1%, 1/8W	27.4K, 1%, 1/8W	27.4K, 1%, 1/8W	39K, 1%, 1/8W
R54	0.050	0.167	0.100	0.167
R57	471, 1%, 1/8W	600, 1%, 1/8W	600, 1%, 1/8W	600, 1%, 1/8W
R61	390, 5%, 3W	390, 5%, 3W	390, 5%, 3W	135, 5%, 3W
R66	100, 1%, 1/8W	196, 1%, 1/8W	196, 1%, 1/8W	196, 1%, 1/8W
R67	150, 5%, 10W	600, 5%, 10W	400, 5%, 10W	800, 5%, 10W
R74	4.3K, 5%, 1/2W	4.3K, 5%, 1/2W	4.3K, 5%, 1/2W	6.8K, 5%, 1/2W
R76	160K, 5%, 1/2W	200K, 5%, 1/2W	200K, 5%, 1/2W	300K, 5%, 1/2W
R86	100K, 5%, 1/2W	200K, 5%, 1/2W	200K, 5%, 1/2W	300K, 5%, 1/2W
R96	560, 5%, 2W	1.5K, 5%, 2W	1K, 5%, 2W	270, 5%, 2W
R98	270, 5%, 1/2W	270, 5%, 1/2W	270, 5%, 1/2W	1.5K, 5%, 1/2W
R99	300, 5%, 1/2W	100, 5%, 1/2W	100, 5%, 1/2W	100, 5%, 1/2W
R106	470, 1%, 1/4W	470, 1%, 1/4W	470, 1%, 1/4W	1.33K, 1%, 1/4W
R108	1.33K, 1%, 1/4W	1.33K, 1%, 1/4W	1.33K, 1%, 1/4W	2K, 1%, 1/4W
R109	5K	10K	10K	20K

SCHEMATIC NOTES

1. ALL RESISTORS ARE IN OHMS, 1/2W ±5%, UNLESS OTHERWISE NOTED.
2. ALL 1/8W AND 1/4W RESISTORS ARE ±1%, UNLESS OTHERWISE NOTED.
3. ALL CAPACITORS ARE IN MICROFARADS, UNLESS OTHERWISE NOTED.
4. REAR TERMINALS ARE SHOWN IN NORMAL STRAPPING FOR USE OF FRONT PANEL CONTROLS.
5. ▭ DENOTES FRONT PANEL MARKING.
6. ━ ━ ━ DENOTES VOLTAGE FEEDBACK PATH
7. ━ ━ ━ DENOTES CURRENT FEEDBACK PATH
8. TRANSFORMERS AND RFI CHOKE SHOWN STRAPPED FOR 115VAC OPERATION.
9. DC VOLTAGES WERE MEASURED UNDER THE FOLLOWING CONDITIONS.
   A. HEWLETT-PACKARD MODEL 427A OR EQUIVALENT.
   B. 115VAC INPUT
   C. VOLTAGES REFERENCED TO +S, UNLESS OTHERWISE NOTED
   D. VOLTAGES ARE TYPICAL ±10%, UNLESS OTHERWISE NOTED.
   E. ALL READINGS TAKEN IN CONSTANT VOLTAGE OPERATION AT MAXIMUM RATED OUTPUT WITH NO LOAD CONNECTED AND CURRENT CONTROLS TURNED FULLY CLOCKWISE.
10. ALL COMPONENTS LOCATED ON MAIN PRINTED CIRCUIT BOARD, UNLESS OTHERWISE INDICATED.
11. * DENOTES CHASSIS-MOUNTED COMPONENTS
12. PIN LOCATIONS FOR INTEGRATED CIRCUITS ARE AS FOLLOWS

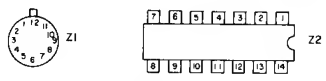

(TOP VIEWS)

13. PIN LOCATIONS FOR SEMICONDUCTORS ARE AS FOLLOWS:

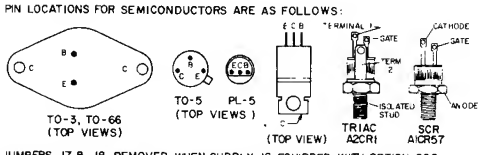

14. JUMPERS J7 & J8 REMOVED WHEN SUPPLY IS EQUIPPED WITH OPTION 020, 022 OR 040. JUMPERS J5 & J6 REMOVED WHEN SUPPLY IS EQUIPPED WITH OPTION 021, 022 OR 040.
15. FOR 115VAC INPUT, CONNECT JUMPERS J1, J2, & J4, AND DISCONNECT J3. FOR 208VAC OR 230VAC INPUT, CONNECT J3 AND DISCONNECT J1, J2, & J4.
16. SEE FIGURE 4-4 FOR PREREGULATOR CONTROL CIRCUIT WAVEFORMS

REFERENCE CIRCUIT

WARNING

SOME CIRCUITS IN THIS POWER SUPPLY ARE CONNECTED DIRECTLY TO THE INPUT AC POWER LINE. THE CASE AND HEAT-SINK OF THE A2 RFI ASSEMBLY ARE ALSO AT AC LINE POTENTIAL. EXERCISE EXTREME CAUTION WHEN WORKING ON ENERGIZED CIRCUITS.

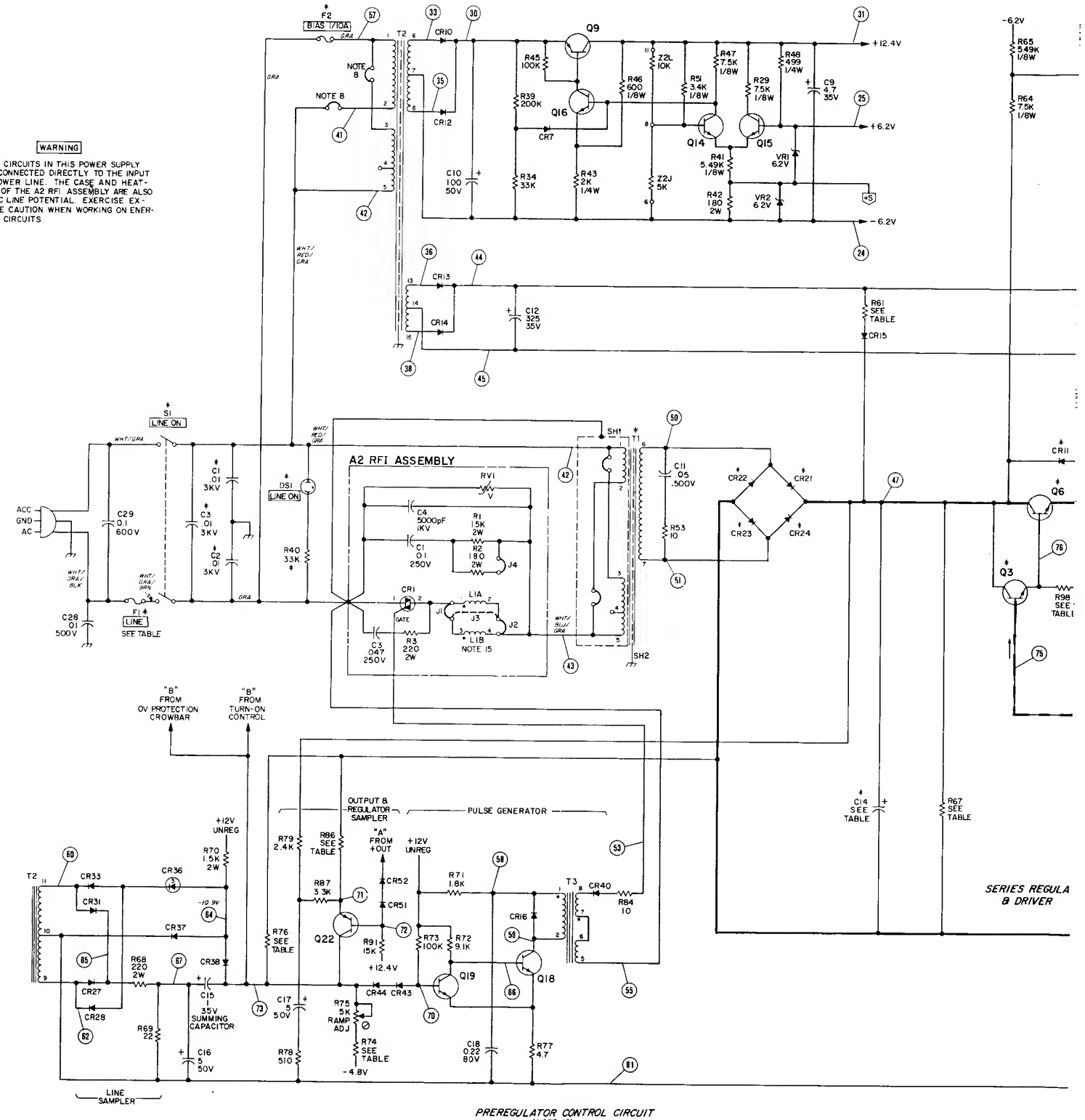

PREREGULATOR CONTROL CIRCUIT
(NOTE 16)

SALES OFFICES

Arranged alphabetically by country

6539 Lankershim Boulevard
North Hollywood 91604
Tel: (213) 877-1282
TWX: 910-499-2671

5200 Hillview Av
Palo Alto, CA 94304
Tel: (408) 988-7000

546 W. North Market Blvd
Sacramento 95834
Tel: (916) 929-7222

5606 Aero Drive
P.O. Box 23333
San Diego 92123
Tel: (714) 279-3200

563 Brookhollow Dr.
Santa Ana, CA 92705
Tel: (714) 641-0977

5303 Scott Boulevard
Santa Clara 95050
Tel: (408) 988-7000
TWX: 910-338-0518

254 Carlton Court
So. San Francisco 94080
Tel: (415) 877-0772

Tarzana
Tel: (213) 705-3344

COLORADO
5600 DTC Parkway
Englewood 80110
Tel: (303) 771-3455

CONNECTICUT
27 Barnes Industrial Road
Barnes Park South
Wallingford 06492
Tel: (203) 265-7801

FLORIDA
P.O. Box 24210
5727 N.W. 62nd Street
Ft. Lauderdale 33309
Tel: (305) 973-2600

2180 Woodcock Drive #132
Brownett Building
Jacksonville 32207
Tel: (904) 398-0663

P.O. Box 13910
5177 Lake Ellenor Dr.
Orlando 32809
Tel: (305) 859-2900

P.O. Box 12826
Suite 5, Bldg. 1
Office Park North
Pensacola 32575
Tel: (904) 476-8422

110 South Hoover Blvd
Suite 120
Tampa 33609
Tel: (813) 872-0900

GEORGIA
P.O. Box 105005
2150 Interstate North Parkway
Atlanta 30348
Tel: (404) 955-1500
TWX: 810-766-4890

Medical Service Only
Augusta 30903
Tel: (404) 736-0592

P.O. Box 2103
1172 N. Davis Drive
Warner Robins 31098
Tel: (912) 922-0449

HAWAII
2875 So. King Street
Honolulu 96826
Tel: (808) 955-4455

ILLINOIS
211 Prospect Rd.
Bloomington 61701
Tel: (309) 663-0383

1201 Tollview Dr.
Rolling Meadows
60008
Tel: (312) 255-9800
TWX: 910-687-2260

INDIANA
7301 North Shadeland Ave
Indianapolis 46250
Tel: (317) 842-1000
TWX: 810-260-1797

IOWA
2415 Heinz Road
Iowa City 52240
Tel: (319) 351-1020

KENTUCKY
10170 Linn Station Road
Suite 525
Louisville 40223
Tel: (502) 426-0100

LOUISIANA
P.O. Box 1449
3229-39 Williams Boulevard
Kenner 70062
Tel: (504) 443-6201

MARYLAND
7121 Standard Drive
Parkway Industrial Center
Hanover 21076
Tel: (301) 796-7700
TWX: 710-862-1943

2 Choke Cherry Road
Rockville 20850
Tel: (301) 948-6370
TWX: 710-828-9684

MASSACHUSETTS
32 Hartwell Ave
Lexington 02173
Tel: (617) 861-8960
TWX: 710-326-6904

MICHIGAN
23855 Research Drive
Farmington Hills 48024
Tel: (313) 476-6400

724 West Centre Ave
Kalamazoo 49002
Tel: (616) 323-8362

MINNESOTA
2400 N. Prior Ave
St. Paul 55113
Tel: (612) 636-0700

MISSISSIPPI
322 N. Mart Plaza
Jackson 39206
Tel: (601) 982-9363

MISSOURI
11131 Colorado Ave.
Kansas City 64137
Tel: (816) 763-8000
TWX: 910-771-2087

1024 Executive Parkway
St. Louis 63141
Tel: (314) 878-0200

NEBRASKA
Medical Only
7101 Mercy Road
Suite 101
Omaha 68106
Tel: (402) 392-0948

NEVADA
***Las Vegas**
Tel: (702) 736-6610

NEW JERSEY
Crystal Brook Professional Building
Route 35
Eatontown 07724
Tel: (201) 542-1384

W. 120 Century Rd
Paramus 07652
Tel: (201) 265-5000
TWX: 710-990-4951

NEW MEXICO
P.O. Box 11634
Station E
11300 Lomas Blvd., N.E.
Albuquerque 87123
Tel: (505) 292-1330
TWX: 910-989-1185

156 Wyatt Drive
Las Cruces 88001
Tel: (505) 526-2484
TWX: 910-9983-0550

NEW YORK
6 Automation Lane
Computer Park
Albany 12205
Tel: (518) 458-1550
TWX: 710-444-4961

650 Pennton Hill Office Park
Fairport 14450
Tel: (716) 223-9950
TWX: 510-253-0092

No. 1 Pennsylvania Plaza
55th Floor
34th Street & 8th Avenue
New York 10001
Tel: (212) 971-0800

5858 East Molloy Road
Syracuse 13211
Tel: (315) 455-2486

1 Crossways Park West
Woodbury 11797
Tel: (516) 921-0300
TWX: 510-221-2183
Tel: (513) 671-7400

NORTH CAROLINA
5605 Roanne Way
Greensboro 27409
Tel: (919) 852-1800

OHIO
Medical/Computer Only
9920 Carver Road
Cincinnati 45242
Tel: (513) 891-9870
16500 Sprague Road
Cleveland 44130
Tel: (216) 243-7300
TWX: 810-423-9430

962 Crupper Ave
Columbus 43229
Tel: (614) 436-1041

330 Progress Rd
Dayton 45449
Tel: (513) 859-8202

OKLAHOMA
P.O. Box 32008
6301 N. Meridan Avenue
Oklahoma City 73112
Tel: (405) 721-0200

9920 E. 42nd Street
Suite 121
Tulsa 74145
Tel: (918) 665-3300

OREGON
17890 S.W. Lower Boones Ferry Road
Tualatin 97062
Tel: (503) 620-3350

PENNSYLVANIA
1021 8th Avenue
King of Prussia Industrial Park
King of Prussia 19406
Tel: (215) 265-7000
TWX: 510-660-2670

111 Zeta Drive
Pittsburgh 15238
Tel: (412) 782-0400

SOUTH CAROLINA
P.O. Box 6442
6941-0 N. Trenholm Road
Columbia 29206
Tel: (803) 782-6493

TENNESSEE
8906 Kingston Pike
Knoxville 37919
Tel: (615) 691-2371

3070 Directors Row
Directors Square
Memphis 38131
Tel: (901) 346-8370

***Nashville**
Medical Service Only
Tel: (615) 244-5448

TEXAS
4171 North Mesa
Suite C110
El Paso 79902
Tel: (915) 533-3555

P.O. Box 42816
10535 Harwin St.
Houston 77036
Tel: (713) 776-6400

***Lubbock**
Medical Service Only
Tel: (806) 799-4472

P.O. Box 1270
201 E. Arapaho Rd.
Richardson 75081
Tel: (214) 231-6101

205 Billy Mitchell Road
San Antonio 78226
Tel: (512) 434-8241

UTAH
2160 South 3270 West Street
Salt Lake City 84119
Tel: (801) 972-4711

VIRGINIA
P.O. Box 9669
2914 Hungary Spring Road
Richmond 23228
Tel: (804) 285-3431

Computer Systems/Medical Only
Airport Executive Center
Suite 302
5700 Thurston Avenue
Virginia Beach 23455
Tel: (804) 460-2471

WASHINGTON
Bellefield Office Pk
1203 - 114th Ave. S.E.
Bellevue 98004
Tel: (206) 454-3971
TWX: 910-443-2446

P.O. Box 4010
Spokane 99202
Tel: (509) 535-0864

***WEST VIRGINIA**
Medical/Analytical Only
4604 Mac Corkle Ave., S.E.
Charleston 25304
Tel: (304) 925-0492

WISCONSIN
150 South Sunny Slope Road
Brookfield 53005
Tel: (414) 784-8800

FOR U.S. AREAS NOT LISTED:
Contact the regional office nearest you.
Atlanta, Georgia **North Holly-wood**, California
Rockville, Maryland
Rolling Meadows, Illinois
Their complete addresses are listed above.

USSR
Hewlett-Packard Representative Office
USSR
Pokrovsky Boulevard
4/17-kw. 12
Moscow 101000
Tel: 294 20 24
Telex: 7825 hewpak su

YUGOSLAVIA
Iskra Commerce, n.sol.o.
Zastopstvo Hewlett-Packard
Obilicev Venac 26
YU 11000 **Beograd**
Tel: 636-955
Telex: 11530

Iskra Commerce, n.sol.o.
Zastopstvo Hewlett-Packard
Miklosiceva 38/VII
YU-61000 **Ljubljana**
Tel: 321-674, 315-879
Telex: 31583

URUGUAY
Pablo Ferrando S.A.C.el.
Avenida Italia 2877
Casilla de Correo 370
Montevideo
Tel: 40-3102
Telex: 702 Public Booth
Para Pablo Ferrando

VENEZUELA
Hewlett-Packard de Venezuela C.A.
P.O. Box 50933
Caracas 105
Los Ruices Norte
3a Transversal
Edificio Segre
Caracas 107
Tel: 239-4133 (20 lines)
Telex: 25146 HEWPACK

ZAMBIA
R.J. Tilbury (Zambia) Ltd.
P.O. Box 2792
Lusaka
Tel: 73793

MEDITERRANEAN AND MIDDLE EAST COUNTRIES NOT SHOWN, PLEASE CONTACT:
Hewlett-Packard S.A.
Mediterranean and Middle East Operations
35, Kolokotroni Street
Platia Kefallariou
GR-Kifissia-**Athens**, Greece
Tel: 8080359/429
Telex: 21-6588
Cable: HEWPACKSA Athens

SOCIALIST COUNTRIES NOT SHOWN, PLEASE CONTACT:
Hewlett-Packard Ges.m.b.H.
Handelskai 52
P.O. Box 7
A-1205 **Vienna**, Austria
Tel: (0222) 35 16 21 to 27
Cable: HEWPAK Vienna
Telex: 75923 hewpak a

OTHER AREAS NOT LISTED, CONTACT:
Hewlett-Packard Intercontinental
3495 Deer Creek Road
Palo Alto, California 94304
Tel: (415) 856-1501
TWX: 910-373-1267
Cable: HEWPACK Palo Alto
Telex: 034-8300, 034-8493

Hewlett-Packard S.A.
7, rue du Bois-du-Lan
P.O. Box
CH-1217 Meyrin 2 - **Geneva**
Switzerland
Tel: (022) 82 70 00
Cable: HEWPACKSA Geneva
Telex: 2 24 86

***Service Only**

2-15-80

ANGOLA
Telectra
Empresa Técnica de Equipamentos Eléctricos, S.A.R.L.
R. Barbosa Rodrigues, 41-I°DT.°
Caixa Postal, 6487
Luanda
Tel: 35515/6

ARGENTINA
Hewlett-Packard Argentina S.A.
Santa Fe 2035, Martinez
6140 **Buenos Aires**
Tel: 792-1239, 798-6086
Telex: 122443 AR CIGY

Biotron S.A.C.I.y M.
Avda. Paseo Colon 221
9 piso
1399 **Buenos Aires**
Tel: 30-4846/1851/8384
34-9356/0460/4551
Telex: (33) 17595 BIO AR

AUSTRALIA

AUSTRALIA CAPITAL TERR.
Hewlett-Packard Australia Pty. Ltd.
121 Wollongong Street
Fyshwick, 2609
Tel: 804244
Telex: 62650

NEW SOUTH WALES
Hewlett-Packard Australia Pty. Ltd.
31 Bridge Street
Pymble, 2073
Tel: 4496566
Telex: 21561

QUEENSLAND
Hewlett Packard Australia Pty. Ltd.
5th Floor
Teachers Union Building
495-499 Boundary Street
Spring Hill, 4000
Tel: 2291544

SOUTH AUSTRALIA
Hewlett-Packard Australia Pty. Ltd.
153 Greenhill Road
Parkside, 5063
Tel: 2725911
Telex: 82536

VICTORIA
Hewlett-Packard Australia Pty. Ltd.
31-41 Joseph Street
Blackburn, 3130
Tel: 89-6351
Telex: 31024 MELB

WESTERN AUSTRALIA
Hewlett-Packard Australia Pty. Ltd.
141 Stirling Highway
Nedlands, 6009
Tel: 3865455
Telex: 93859

AUSTRIA
Hewlett-Packard Ges.m.b.H.
Wehlstrasse 29
P.O. Box 7
A-1205 **Vienna**
Tel: 35-16-21-0
Telex: 13582/135066

Hewlett-Packard Ges.m.b.H.
Wehlstrasse, 29
A-1205 **Wien**
Tel: 35-16-21
Telex: 135066

BAHRAIN
Medical Only
Wael Pharmacy
P.O. Box 648
Bahrain
Tel: 54886, 56123
Telex: 8550 WAEL GJ

Al Hamidiya Trading and Contracting
P.O. Box 20074
Manama
Tel: 259978, 259958
Telex: 8895 KALDIA GJ

BANGLADESH
The General Electric Co. of Bangladesh Ltd.
Magnet House 72
Dilkusha Commercial Area
Motijheil, Dacca 2
Tel: 252415, 252419
Telex: 734

BELGIUM
Hewlett-Packard Benelux S.A./N.V.
Avenue du Col-Vert, 1,
(Groenkraaglaan)
B-1170 **Brussels**
Tel: (02) 660 50 50
Telex: 23-494 paloben bru

BRAZIL
Hewlett-Packard do Brasil I.e.C. Ltda.
Alameda Rio Negro, 750
Alphaville
06400 **Barueri** SP
Tel: 429-3222

Hewlett-Packard do Brasil I.e.C. Ltda.
Rua Padre Chagas, 32
90000-**Pôrto Alegre**-RS
Tel: 22-2998, 22-5621

Hewlett-Packard do Brasil I.e.C. Ltda.
Av. Epitacio Pessoa, 4664
22471-**Rio de Janeiro**-RJ
Tel: 286-0237
Telex: 021-21905 HPBR-BR

CANADA

ALBERTA
Hewlett-Packard (Canada) Ltd.
11620A - 168th Street
Edmonton T5M 3T9
Tel: (403) 452-3670
TWX: 610-831-2431

Hewlett-Packard (Canada) Ltd.
210, 7220 Fisher St. S.E.
Calgary T2H 2H8
Tel: (403) 253-2713
TWX: 610-821-6141

BRITISH COLUMBIA
Hewlett-Packard (Canada) Ltd.
10691 Shellbridge Way
Richmond V6X 2W7
Tel: (604) 270-2277
TWX: 610-925-5059

MANITOBA
Hewlett-Packard (Canada) Ltd.
380-550 Century St.
St. James,
Winnipeg R3H 0Y1
Tel: (204) 786-6701
TWX: 610-671-3531

NOVA SCOTIA
Hewlett-Packard (Canada) Ltd.
P.O. Box 931
800 Windmill Road
Dartmouth B3B 1L1
Tel: (902) 469-7820
TWX: 610-271-4482

ONTARIO
Hewlett-Packard (Canada) Ltd.
1020 Morrison Dr.
Ottawa K2H 8K7
Tel: (613) 820-6483
TWX: 610-563-1636

Hewlett-Packard (Canada) Ltd.
6877 Goreway Drive
Mississauga L4V 1M8
Tel: (416) 678-9430
TWX: 610-492-4246

Hewlett-Packard (Canada) Ltd.
552 Newbold Street
London N6E 2S5
Tel: (519) 686-9181
TWX: 610-352-1201

QUEBEC
Hewlett-Packard (Canada) Ltd.
275 Hymus Blvd.
Pointe Claire H9R 1G7
Tel: (514) 697-4232
TWX: 610-422-3022

FOR CANADIAN AREAS NOT LISTED:
Contact Hewlett-Packard (Canada) Ltd. in Mississauga.

CHILE
Jorge Calcagni y Cia. Ltda.
Arturo Burhle 065
Casilla 16475
Correo 9, **Santiago**
Tel: 220222
Telex: JCALCAGNI

COLOMBIA
Instrumentación
Henrik A. Langebaek & Kier S.A.
Carrera 7 No. 48-75
Apartado Aéreo 6287
Bogotá, 1 D.E.
Tel: 269-8877
Telex: 44400

Instrumentación
H.A. Langebaek & Kier S.A.
Carrera 63 No. 49-A-31
Apartado 54098
Medellin
Tel: 304475

COSTA RICA
Científica Costarricense S.A.
Avenida 2, Calle 5
San Pedro de Montes de Oca
Apartado 10159
San José
Tel: 24-38-20, 24-08-19
Telex: 2367 GALGUR CR

CYPRUS
Kypronics
19 Gregorios Xenopoulos Street
P.O. Box 1152
Nicosia
Tel: 45628/29
Telex: 3018

CZECHOSLOVAKIA
Hewlett-Packard
Obchodni zastupitelstvi v CSSR
Pisemny styk
Post. schranka 27
CS 118 01 **Praha** 011
CSSR

Vyvojova a Provozni Zakladna
Vyzkumnych Ustavu v Bechovicich
CSSR-25097 **Bechovice u Prahy**
Tel: 89 93 41
Telex: 12133

Institute of Medical Bionics
Vyskumny Ustav Lekarskej Bioniky
Jedlova 6
CS-88346 **Bratislava-Kramare**
Tel: 44-551
Telex: 93229

DENMARK
Hewlett-Packard A/S
Datavej 52
DK-3460 **Birkerod**
Tel: (02) 81 66 40
Telex: 37409 hpas dk

Hewlett-Packard A/S
Navervej 1
DK-8600 **Silkeborg**
Tel: (06) 82 71 66
Telex: 37409 hpas dk

ECUADOR
CYEDE Cia. Ltda.
P.O. Box 6423 CCI
Av. Eloy Alfaro 1749
Quito
Tel: 450-975, 243-052
Telex: 2548 CYEDE ED

Medical Only
Hospitalar S.A.
Casilla 3590
Robles 625
Quito
Tel: 545-250

EGYPT
I.E.A.
International Engineering Associates
24 Hussein Hegazi Street
Kasr-el-Aini
Cairo
Tel: 23 829
Telex: 93830

SAMITRO
Sami Amin Trading Office
18 Abdel Aziz Gawish
Abdine-Cairo
Tel: 24932

EL SALVADOR
IPESA
Bulevar de los Heroes 11-48
Edificio Sarah 1148
San Salvador
Tel: 252787

ETHIOPIA
Abdella Abdulmalik
P.O. Box 2635
Addis Ababa
Tel: 11 93 40

FINLAND
Hewlett-Packard Oy
Revontulentie, 7
SF-02100 **Espoo** 10
Tel: (90) 455 0211
Telex: 121563 hewpa sf

FRANCE
Hewlett-Packard France
Zone d'activites de Courtaboeuf
Avenue des Tropiques
Boite Postale 6
91401 **Orsay**-Cédex
Tel: (1) 907 78 25
TWX: 600048F

Hewlett-Packard France
Chemin des Mouilles
B.P. 162
69130 **Ecully**
Tel: (78) 33 81 25
TWX: 310617F

Hewlett-Packard France
20, Chemin de la Cépière
31081 **Toulouse**
Le Mirail-Cédex
Tel: (61) 40 11 12

Hewlett-Packard France
Le Ligoures
Place Romée de Villeneuve
13100 **Aix-en-Provence**
Tel: (42) 59 41 02
TWX: 410770F

Hewlett-Packard France
2, Allee de la Bourgonette
35100 **Rennes**
Tel: (99) 51 42 44
TWX: 740912F

Hewlett-Packard France
18, rue du Canal de la Marne
67300 **Schiltigheim**
Tel: (88) 83 08 10
TWX: 890141F

Hewlett-Packard France
Immeuble péricentre
rue van Gogh
59650 **Villeneuve** D'Ascq
Tel: (20) 91 41 25
TWX: 160124F

Hewlett-Packard France
Bâtiment Ampère
Rue de la Commune de Paris
B.P. 300
93153 **Le Blanc Mesnil**-Cédex
Tel: (01) 931 88 50
Telex: 211032F

Hewlett-Packard France
Av. du Pdt. Kennedy
33700 **Merignac**
Tel: (56) 97 01 81

Hewlett-Packard France
Immeuble Lorraine
Boulevard de France
91035 **Evry**-Cédex
Tel: 077 96 60
Telex: 692315F

Hewlett-Packard France
23 Rue Lothaire
57000 **Metz**
Tel: (87) 65 53 50

GERMAN FEDERAL REPUBLIC
Hewlett-Packard GmbH
Vertriebszentrale Frankfurt
Berner Strasse 117
Postfach 560 140
D-6000 **Frankfurt** 56
Tel: (06011) 50041
Telex: 04 13249 hpffm d

Hewlett-Packard GmbH
Technisches Büro Böblingen
Herrenberger Strasse 110
D-7030 **Böblingen**, Württemberg
Tel: (07031) 667-1
Telex: 07265739 bbn

Hewlett-Packard GmbH
Technisches Büro Düsseldorf
Emanuel-Leutze-Str. 1 (Seestern)
D-4000 **Düsseldorf**
Tel: (0211) 5971-1
Telex: 085/86 533 hpdd d

Hewlett-Packard GmbH
Technisches Büro Hamburg
Kapstadtring 5
D-2000 **Hamburg** 60
Tel: (040) 63804-1
Telex: 21 63 032 hphh d

Hewlett-Packard GmbH
Technisches Büro Hannover
Am Grossmarkt 6
D-3000 **Hannover** 91
Tel: (0511) 46 60 01
Telex: 092 3259

Hewlett-Packard GmbH
Technisches Büro Nürnberg
Neumeyerstrasse 90
D-8500 **Nürnberg**
Tel: (0911) 52 20 83
Telex: 0623 860

Hewlett-Packard GmbH
Technisches Büro München
Eschenstrasse 5
D-8021 **Taufkirchen**
Tel: (089) 6117-1
Telex: 0524985

Hewlett-Packard GmbH
Technisches Büro Berlin
Kaithstrasse 2-4
D-1000 **Berlin** 30
Tel: (030) 24 90 86
Telex: 018 3405 hpbln d

GREECE
Kostas Karayannis
8 Omirou Street
Athens 133
Tel: 32 30 303/32/37 731
Telex: 21 59 62 RKAR GR

GUAM
Guam Medical Supply, Inc.
Suite C, Airport Plaza
P.O. Box 8947
Tamuning 96911
Tel: 646-4513

GUATEMALA
IPESA
Avenida Reforma 3-48
Zona 9
Guatemala City
Tel: 316627, 314786, 66471-5, ext. 9
Telex: 4192 Teletro Gu

HONG KONG
Hewlett-Packard Hong Kong Ltd.
11th Floor, Four Seas Bldg.
212 Nathan Rd.
Kowloon
Tel: 3-697446 (5 lines)
Telex: 36678 HX

Medical/Analytical Only
Schmidt & Co. (Hong Kong) Ltd.
Wing On Centre, 28th Floor
Connaught Road, C
Hong Kong
Tel: 5-455644
Telex: 74766 SCHMX HX

INDIA
Blue Star Ltd
Sahas
414/2 Vir Savarkar Marg
Prabhadevi
Bombay 400 025
Tel: 45 78 87
Telex: 011-4093

Blue Star Ltd
Band Box House
Prabhadevi
Bombay 400 025
Tel: 45 73 01
Telex: 011-3751

Blue Star Ltd
Bhavdeep
Stadium Road
Ahmedabad 380 014
Tel: 43922
Telex: 012-234

Blue Star Ltd
7 Hare Street
Calcutta 700 001
Tel: 23-0131
Telex: 021-7655

Blue Star Ltd.
Bhandari House
91 Nehru Place
New Delhi 110 024
Tel: 682547
Telex: 031-2463

Blue Star Ltd
T.C. 7/603 'Poornima'
Maruthankuzhi
Trivandrum 695 013
Tel: 65799
Telex: 0884-259

Blue Star Ltd.
11 Magarath Road
Bangalore 560 025
Tel: 55668
Telex: 0845-430

Blue Star Ltd.
Meeakshi Mandiram
XXXXV/1379-2 Mahatma Gandhi Rd.
Cochin 682 016
Tel: 32069
Telex: 085-514

Blue Star Ltd
1-1-117/1 Sarojini Devi Road
Secunderabad 500 033
Tel: 70126
Telex: 0155-459

Blue Star Ltd.
133 Kodambakkam High Road
Madras 600 034
Tel: 82057
Telex: 041-379

ICELAND
Medical Only
Elding Trading Company Inc.
Hafnarhvoli - Tryggvagötu
P.O. Box 895
IS-**Reykjavik**
Tel: 1 58 20/1 63 03

INDONESIA
BERCA Indonesia P.T.
P.O. Box 496/Jkt
Jln. Abdul Muis 62
Jakarta
Tel: 349255, 349886
Telex: 46748 BERSIL IA

BERCA Indonesia P.T.
P.O. Box 174/Sby.
23 Jln. Jimerto
Surabaya
Tel: 42027

IRELAND
Hewlett-Packard Ltd.
Kestrel House
Clanwilliam Place
Lower Mount Street
Dublin 2, Eire

Hewlett-Packard Ltd.
2C Avongberg Ind. Est.
Long Mile Road
Dublin 12
Tel: 514322/514224
Telex: 30439

Medical Only
Cardiac Services (Ireland) Ltd.
Kilmore Road
Artane
Dublin 5, Eire
Tel: (01) 315820

Medical Only
Cardiac Services Co.
95A Finaghy Rd. South
Belfast BT10 0BY
GB-Northern Ireland
Tel: (0232) 625566
Telex: 747626

ISRAEL
Electronics Engineering Div. of Motorola Israel Ltd.
16, Kremenetski Street
P.O. Box 25016
Tel-Aviv
Tel: 38973
Telex: 33569, 34164

ITALY
Hewlett-Packard Italiana S.p.A.
Via G. Di Vittorio, 9
20063 **Cernusco Sul Naviglio** (MI)
Tel: (2) 903691
Telex: 334632 HEWPACKIT

Hewlett-Packard Italiana S.p.A.
Via Turazza, 14
35100 **Padova**
Tel: (49) 664888
Telex: 430315 HEWPACKI

Hewlett-Packard Italiana S.p.A.
Via G. Armellini 10
1-00143 **Roma**
Tel: (06) 54 69 61
Telex: 610514

Hewlett-Packard Italiana S.p.A.
Corso Giovanni Lanza 94
I-10133 **Torino**
Tel: (011) 659308
Telex: 221079

Hewlett-Packard Italiana S.p.A.
Via Principe Nicola 43 G/C
I-95126 **Catania**
Tel: (095) 37 05 04
Telex: 970291

Hewlett-Packard Italiana S.p.A.
Via Nuova san Rocco A Capadimonte, 62A
80131 **Napoli**
Tel: (081) 710698

Hewlett-Packard Italiana S.p.A.
Via Martin Luther King, 38/111
I-40132 **Bologna**
Tel: (051) 402394
Telex: 511630

JAPAN
Yokogawa-Hewlett-Packard Ltd.
29-21, Takaido-Higashi 3-chome
Suginami-ku, **Tokyo** 168
Tel: 03-331-6111
Telex: 232-2024 YHP-Tokyo

Yokogawa-Hewlett-Packard Ltd.
Chuo Bldg., 4th Floor
4-20, Nishinakajima 5-chome
Yodogawa-ku, Osaka-shi
Osaka, 532
Tel: 06-304-6021
Telex: 523-3624

Yokogawa-Hewlett-Packard Ltd.
Sumitomo Seimei Nagaya Bldg.
11-2 Shimosasajima-cho,
Nakamura-ku, **Nagoya**, 450
Tel: 052 571-5171

Yokogawa-Hewlett-Packard Ltd.
Tanigawa Building
2-24-1 Tsuruya-cho
Kanagawa-ku
Yokohama, 221
Tel: 045-312-1252
Telex: 382-3204 YHP YOK

Yokogawa-Hewlett-Packard Ltd.
Mito Mitsui Building
105, 1-chome, San-no-maru
Mito, Ibaragi 310
Tel: 0292-25-7470

Yokogawa-Hewlett-Packard Ltd.
Inoue Building
1348-3, Asahi-cho, 1-chome
Atsugi, Kanagawa 243
Tel: 0462-24-0452

Yokogawa-Hewlett-Packard Ltd.
Kumagaya Asahi
Hachijuni Building
4th Floor
3-4, Tsukuba
Kumagaya, Saitama 360
Tel: 0485-24-6563

JORDAN
Mouasher Cousins Co.
P.O. Box 1387
Amman
Tel: 24907/39907
Telex: SABCO JO 1456

KENYA
ADCOM Ltd., Inc.
P.O. Box 30070
Nairobi
Tel: 331955
Telex: 22639

Medical Only
International Aeradio (E.A.) Ltd.
P.O. Box 19012
Nairobi Airport
Nairobi
Tel: 336055/56
Telex: 22201/22301

Medical Only
International Aeradio (E.A.) Ltd.
P.O. Box 95221
Mombasa

KOREA
Samsung Electronics Co., Ltd.
4759 Shingil-6-Dong
Yeong Deung POU
Seoul
Tel: 833-4122, 4121
Telex: SAMSAN 27364

KUWAIT
Al-Khaldiya Trading & Contracting
P.O. Box 830-Safat
Kuwait
Tel: 42 4910/41 1726
Telex: 2481 Areeg kt

LUXEMBURG
Hewlett-Packard Benelux S.A./N.V.
Avenue du Col-Vert, 1
(Groenkraaglaan)
B-1170 **Brussels**
Tel: (02) 660 5050
Telex: 23 494

MALAYSIA
Hewlett-Packard Sales (Malaysia) Sdn. Bhd.
Suite 2.21/2.22
Bangunan Angkasa Raya
Jalan Ampang
Kuala Lumpur
Tel: 483680, 485653

Protel Engineering
P.O. Box 1917
Lot 259, Satok Road
Kuching, **Sarawak**
Tel: 53544

MEXICO
Hewlett-Packard Mexicana, S.A. de C.V.
Av. Periférico Sur No. 6501
Tepepan, Xochimilco
Mexico 23, D.F.
Tel: 905-676-4600
Telex: 017-74-507

Hewlett-Packard Mexicana, S.A. de C.V.
Rio Volga #600
Col. Del Valle
Monterrey, N.L.
Tel: 78-32-10

MOROCCO
Dolbeau
81 rue Karatchi
Casablanca
Tel: 3041 82
Telex: 23051/22822

Gerep
2, rue d'Agadir
Boite Postal 156
Casablanca
Tel: 272093/5
Telex: 23 739

MOZAMBIQUE
A.N. Goncalves, Ltd.
162, 1° Apt. 14 Av. D. Luis
Caixa Postal 107
Maputo
Tel: 27091, 27114
Telex: 6-203 NEGON Mo

NETHERLANDS
Hewlett-Packard Benelux N.V.
Van Heuven Goedhartlaan 121
P.O. Box 667
1181KK **Amstelveen**
Tel: (20) 47 20 21
Telex: 13 216

NEW ZEALAND
Hewlett-Packard (N.Z.) Ltd.
4-12 Cruickshank Street
Kilbirnie, Wellington 3
P.O. Box 9443
Courtney Place
Wellington
Tel: 877-199

Hewlett-Packard (N.Z.) Ltd.
P.O. Box 26-189
169 Manukau Road
Epsom, **Auckland**
Tel: 687-159

Analytical/Medical Only
Northrop Instruments & Systems Ltd.,
Sturdee House
85-87 Ghuznee Street
P.O. Box 2406
Wellington
Tel: 850-091
Telex: NZ 31291

Northrup Instruments & Systems Ltd.
Eden House, 44 Khyber Pass Rd.
P.O. Box 9682, Newmarket
Auckland 1
Tel: 794-091

Northrup Instruments & Systems Ltd.
Terrace House, 4 Oxford Terrace
P.O. Box 8388
Christchurch
Tel: 64-165

NIGERIA
The Electronics Instrumentations Ltd.
N6B/770 Oyo Road
Oluseun House
P.M.B. 5402
Ibadan
Tel: 461577
Telex: 31231 TEIL NG

The Electronics Instrumentations Ltd.
144 Agege Motor Road, Mushin
P.O. Box 481
Mushin, **Lagos**

NORWAY
Hewlett-Packard Norge A/S
Ostendalen 18
P.O. Box 34
1345 **Osteraas**
Tel: (02) 1711 80
Telex: 16621 hpnas n

Hewlett-Packard Norge A/S
Nygaardsgaten 114
P.O. Box 4210
5013 Nygaardsgaten,
Bergen
Tel: (05) 21 97 33

PANAMA
Electrónico Balboa, S.A.
Aparatado 4929
Panama 5
Calle Samuel Lewis
Edificio "Alfa," No. 2
Ciudad de Panama
Tel: 64-2700
Telex: 3483103 Curundu, Canal Zone

PERU
Compañia Electro Médica S.A.
Los Flamencos 145
San Isidro Casilla 1030
Lima 1
Tel: 41-4325
Telex: Pub. Booth 25424 SISIDRO

PAKISTAN
Mushko & Company Ltd.
Oosman Chambers
Abdullah Haroon Road
Karachi-3
Tel: 511027, 512927
Telex: 2894

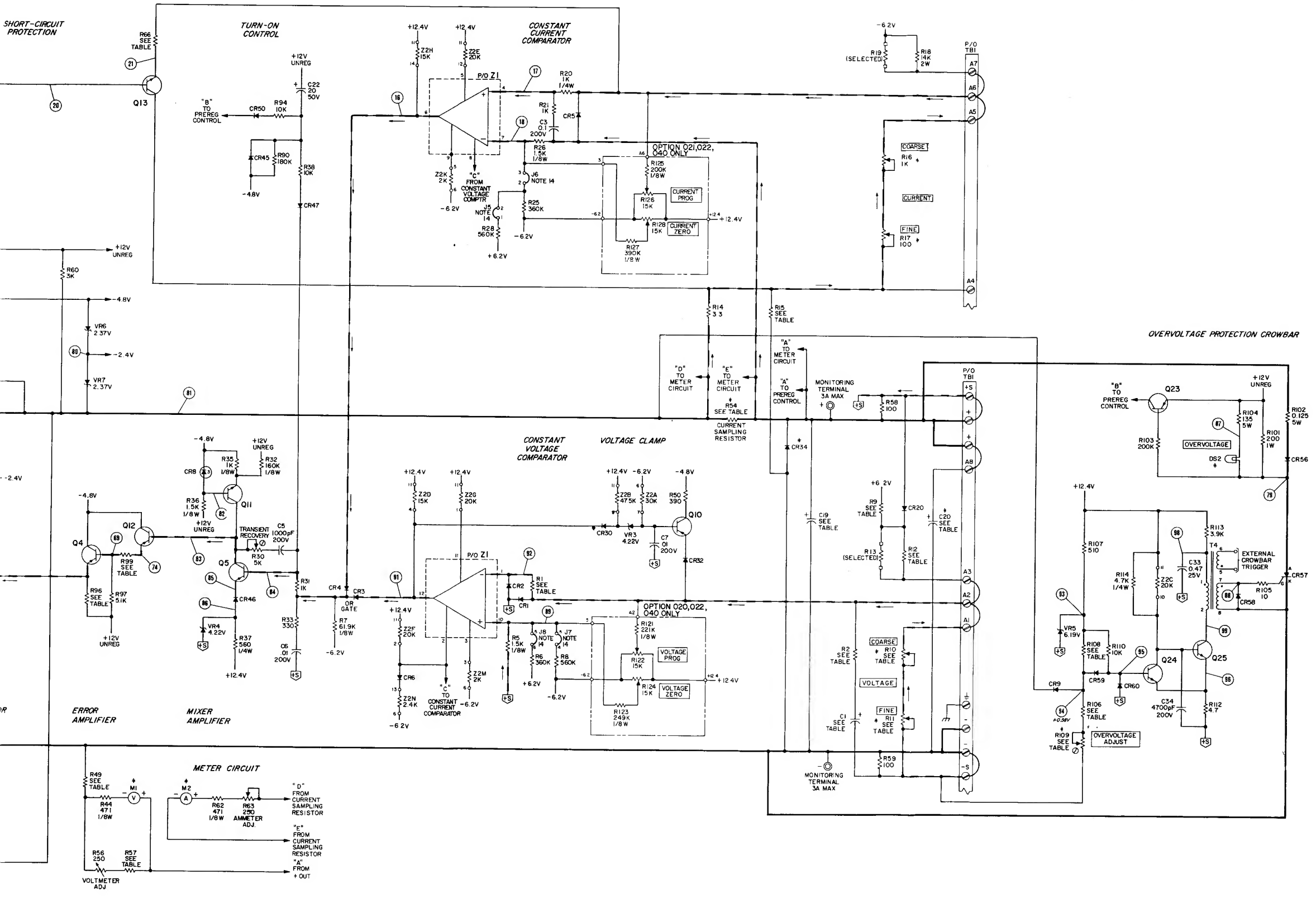

Figure 7-7. Models 6263B, 6265B, 6266B, and 6271B, Schematic Diagram

WARNING

THE CASE AND HEATSINK OF THE A2 RFI ASSEMBLY ARE AT AC LINE POTENTIAL. EXERCISE EXTREME CAUTION DURING SERVICING.

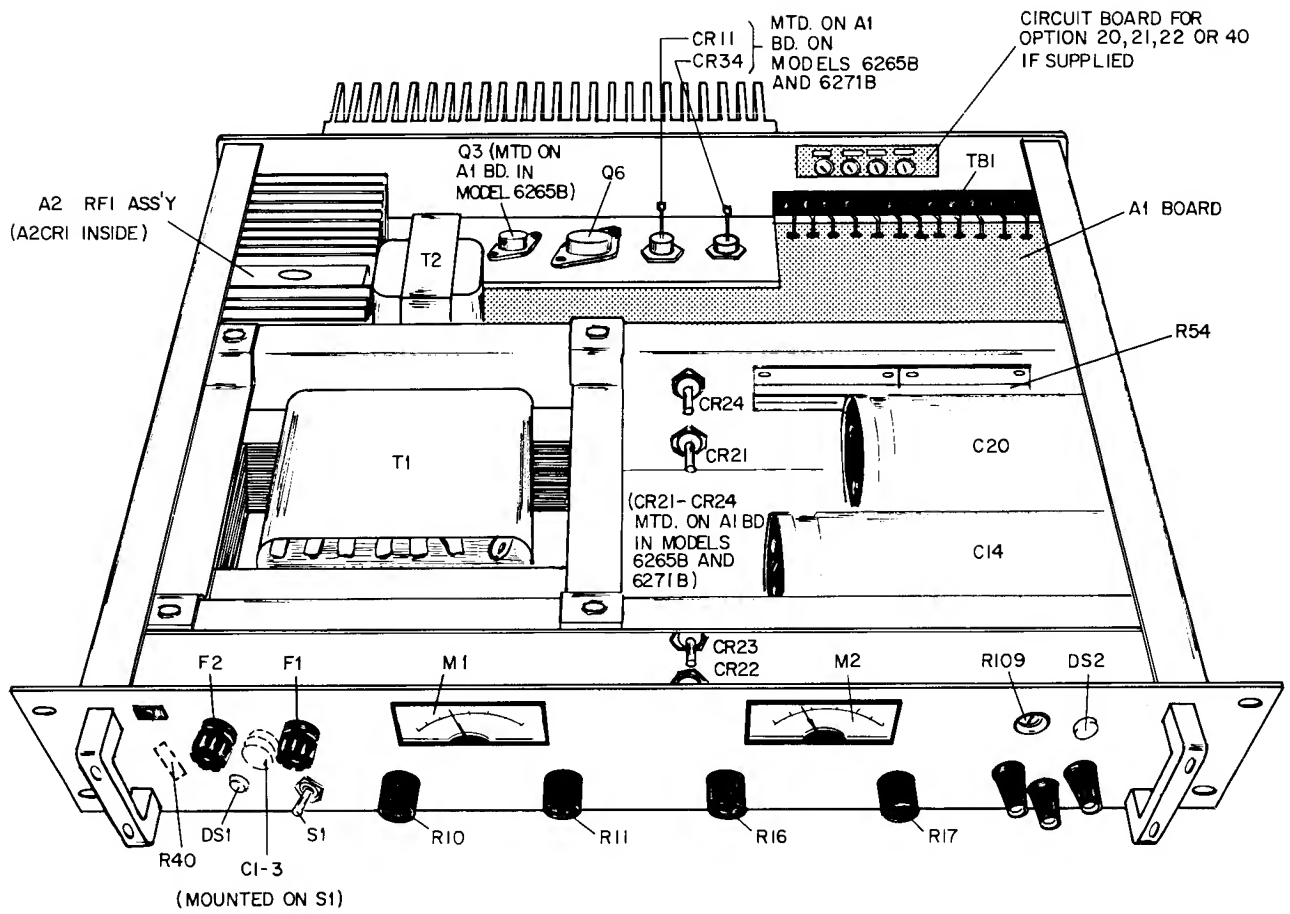

Figure 7-8. Chassis Component Locations for Models 6263B, 6265B, 6266B, and 6271B

SALES OFFICES

Arranged alphabetically by country (cont.)

Mushko & Company, Ltd
10, Bazar Rd
Sector G-6/4
Islamabad
Tel 28264

PHILIPPINES
The Online Advanced Systems Corporation
Rico House
Amorsolo cor. Herrera Str
Legaspi Village, Makati
P.O. Box 1510
Metro **Manila**
Tel. 85-35-81, 85-34-91, 85-32-21
Telex 3274 ONLINE

RHODESIA
Field Technical Sales
45 Kelvin Road North
P.O. Box 3458
Salisbury
Tel. 705231 (5 lines)
Telex RH 4122

POLAND
Biuro Informacji Technicznej
Hewlett-Packard
Ul Stawki 2, 6P
PL00-950 **Warszawa**
Tel: 39 59 62, 39 51 87
Telex 81 24 53

PORTUGAL
Telectra-Empresa Técnica de Equipamentos Eléctricos S.a.r.l.
Rua Rodrigo da Fonseca 103
P.O. Box 2531
P-**Lisbon** 1
Tel (19) 68 60 72
Telex 12598

Medical Only
Mundinter
Intercambio Mundial de Comércio S.a.r.l.
P.O. Box 2761
Avenida Antonio Augusto de Aguiar 138
P-**Lisbon**
Tel: (19) 53 21 31/7
Telex: 16691 munter p

PUERTO RICO
Hewlett-Packard Inter-Americas
Puerto Rico Branch Office
Calle 272,
#203 Urb. Country Club
Carolina 00630
Tel. (809) 762-7255
Telex. 345 0514

QATAR
Nasser Trading & Contracting
P.O. Box 1563
Doha
Tel. 22170
Telex. 4439 NASSER

ROMANIA
Hewlett-Packard Reprezentanta
Bd.n. Balcescu 16
Bucuresti
Tel. 15 80 23/13 88 85
Telex 10440

SAUDI ARABIA
Modern Electronic Establishment (Head Office)
P.O. Box 1228, Baghdadiah Street
Jeddah
Tel. 27 798
Telex 40035
Cable ELECTA JEDDAH

Modern Electronic Establishment (Branch)
P.O. Box 2728
Riyadh
Tel 62596/66232
Telex 202049

Modern Electronic Establishment (Branch)
P.O. Box 193
Al-Khobar
Tel. 44678-44813
Telex 670136
Cable ELECTA AL-KHOBAR

SINGAPORE
Hewlett-Packard Singapore (Pte.) Ltd.
6th Floor Inchcape House
450-452 Alexandra Road
P.O. Box 58
Alexandra Post Office
Singapore 9115
Tel 631788
Telex HPSG RS 21486

SOUTH AFRICA
Hewlett-Packard South Africa (Pty.), Ltd.
Private Bag Wendywood,
Sandton, Transvaal, 2144
Hewlett-Packard Centre
Daphne Street, Wendywood,
Sandton, 2144
Tel 802-5111/25
Telex 8-4782

Hewlett-Packard South Africa (Pty.), Ltd.
P.O. Box 120
Howard Place,
Cape Province, 7450
Pine Park Centre, Forest Drive,
Pinelands,
Cape Province, 7405
Tel 53-7955 thru 9
Telex 57-0006

SPAIN
Hewlett-Packard Española, S.A.
Calle Jerez 3
E-**Madrid** 16
Tel (1) 458 26 00 (10 lines)
Telex 23515 hpe

Hewlett-Packard Española S.A.
Colonia Mirasierra
Edificio Juban
c/o Costa Brava,
Madrid 34

Hewlett-Packard Española, S.A.
Milanesado 21-23
E-**Barcelona** 17
Tel (3) 203 6200 (5 lines)
Telex 52603 hpbe e

Hewlett-Packard Española, S.A.
Av Ramón y Cajal, 1
Edificio Sevilla, planta 9°
E-**Sevilla** 5
Tel 64 44 54/58

Hewlett-Packard Española S.A.
Edificio Albia II 7° B
E-**Bilbao** 1
Tel. 23 83 06/23 82 06

Hewlett-Packard Española S.A.
C/Ramon Gordillo 1 (Entlo.)
E-**Valencia** 10
Tel. 96-361.13 54/361 13 58

SRI LANKA
Metropolitan Agencies Ltd
209/9 Union Place
Colombo 2
Tel 35947
Telex 1377METROLTD CE

SUDAN
Radison Trade
P.O. Box 921
Khartoum
Tel 44048
Telex 375

SURINAM
Surtel Radio Holland N.V.
Grote Hofstr 3-5
P.O. Box 155
Paramaribo
Tel. 72118, 77880

SWEDEN
Hewlett-Packard Sverige AB
Enighetsvägen 3, Fack
S-161 **Bromma** 20
Tel (08) 730 05 50
Telex 10721
Cable MEASUREMENTS Stockholm

Hewlett-Packard Sverige AB
Frötallsgatan 30
S-421 32 **Vastra Frölunda**
Tel (031) 49 09 50
Telex 10721 via Bromma office

SWITZERLAND
Hewlett-Packard (Schweiz) AG
Zürcherstrasse 20
P.O. Box 307
CH-8952 **Schlieren-Zürich**
Tel. (01) 7305240
Telex 53933 hpag ch
Cable HPAG CH

Hewlett-Packard (Schweiz) AG
Château Bloc 19
CH-1219 **Le Lignon-Geneva**
Tel (022) 96 03 22
Telex 27333 hpag ch
Cable HEWPACKAG Geneva

SYRIA
General Electronic Inc.
Nuri Basha-Ahnaf Ebn Kays Street
P.O. Box 5781
Damascus
Tel 33 24 87
Telex 11215 ITIKAL
Cable ELECTROBOR DAMASCUS

Medical only
Sawah & Co
Place Azmé
B.P. 2308
Damascus
Tel 16 367-19 697-14 268
Telex 11304 SATACO SY
Cable SAWAH, DAMASCUS

Suleiman Hilal El-Milawi
P.O. Box 2528
Mamoun Bitar Street, 56-58
Damascus
Tel 11 46 63
Telex 11270
Cable HILAL DAMASCUS

TAIWAN
Hewlett-Packard Far East Ltd
Taiwan Branch
Bank Tower, 5th Floor
205 Tun Hau North Road
Taipei
Tel (02) 751-0404 (15 lines)

Hewlett-Packard Far East Ltd
Taiwan Branch
68-2, Chung Cheng 3rd Road
Kaohsiung
Tel (07) 242318-Kaohsiung

Analytical Only
San Kwang Instruments Co., Ltd
20 Yung Sui Road
Taipei
Tel 3615446-9 (4 lines)
Telex 22894 SANKWANG

TANZANIA
Medical Only
International Aeradio (E.A.), Ltd.
P.O. Box 861
Dar es Salaam
Tel: 21251 Ext. 265
Telex 41030

THAILAND
UNIMESA Co. Ltd.
Elcom Research Building
2538 Sukumvit Ave
Bangchak, Bangkok
Tel: 39-32 387, 39-30-338

TRINIDAD & TOBAGO
CARTEL
Caribbean Telecoms Ltd
P.O. Box 732
69 Frederick Street
Port-of-Spain
Tel 62-53068

TUNISIA
Tunisie Electronique
31 Avenue de la Liberte
Tunis
Tel 280 144

Corema
1 ter Av. de Carthage
Tunis
Tel 253 821
Telex 12319 CABAM TN

TURKEY
TEKNIM Company Ltd
Riza Sah Pehlevi Caddesi No 7
Kavaklidere, **Ankara**
Tel 275800
Telex 42155

Teknim Com., Ltd
Barbaros Bulvari 55/12
Besiktas, **Istanbul**
Tel 613 546
Telex 23540

E.M.A.
Muhendislik Kollektif Sirketi
Mediha Eldem Sokak 41/6
Yüksel Caddesi
Ankara
Tel 17 56 22

Yilmaz Ozyurek
Milli Mudafaa Cad 16/6
Kizilay
Ankara
Tel: 25 03 09 - 17 80 26
Telex 42576 OZEK TR

UNITED ARAB EMIRATES
Emitac Ltd. (Head Office)
P.O. Box 1641
Sharjah
Tel 354121/3
Telex 8136

Emitac Ltd. (Branch Office)
P.O. Box 2711
Abu Dhabi
Tel: 331370/1

UNITED KINGDOM
Hewlett-Packard Ltd
King Street Lane
Winnersh, Wokingham
Berkshire RG11 5AR
GB-England
Tel (0734) 784774
Telex 84 71 78/9

Hewlett-Packard Ltd.
Fourier House,
257-263 High Street
London Colney
St. Albans, Herts
GB-England
Tel (0727) 24400
Telex 1-8952716

Hewlett-Packard Ltd
Trafalgar House
Navigation Road
Altrincham
Cheshire WA14 1NU
GB-England
Tel (061) 928 6422
Telex 668068

Hewlett-Packard Ltd
Lygon Court
Hereward Rise
Dudley Road
Halesowen,
West Midlands, B62 8SD
GB-England
Tel (021) 501 1221
Telex 339105

Hewlett-Packard Ltd.
Wedge House
799, London Road
Thornton Heath
Surrey, CR4 6XL
GB-England
Tel: (01) 684-0103/8
Telex 946825

Hewlett-Packard Ltd.
14 Wesley St
Castleford
Yorks WF10 1AE
Tel (0977) 550016
TWX 5557335

Hewlett-Packard Ltd
Tradax House
St. Mary's Walk
Maidenhead
Berkshire, SL6 1ST
GB-England

Hewlett-Packard Ltd
Morley Road
Staplehill
Bristol, BS16 4QT
GB-England

Hewlett-Packard Ltd
South Queensferry
West Lothian, EH30 9TG
GB-Scotland
Tel. (031) 331 1188
Telex 72682

UNITED STATES

ALABAMA
700 Century Park South, Suite 128
Birmingham 35226
Tel. (205) 822-6802

P.O. Box 4207
8290 Whitesburg Dr
Huntsville 35802
Tel. (205) 881-4591

ARIZONA
2336 E. Magnolia St.
Phoenix 85034
Tel. (602) 273-8000

2424 East Aragon Rd
Tucson 85706
Tel. (602) 273-8000

ARKANSAS
Medical Service Only
P.O. Box 5646
Brady Station
Little Rock 72215
Tel: (501) 376-1844

CALIFORNIA
1579 W. Shaw Ave
Fresno 93771
Tel (209) 224-0582

1430 East Orangethorpe Ave
Fullerton 92631
Tel (714) 870-1000

5400 West Rosecrans Blvd
P.O. Box 92105
World Way Postal Center
Los Angeles 90009
Tel (213) 970-7500
TWX 910-325-6608